DRAWING FILE: p:\2017\17241\p-sa_yak_com_cntr\c\c010\nts_17241jn.dwg

LEGEND

NEW	EXISTING	DESCRIPTION
W	W	WATER
SS	SS	SANITARY SEWER
SD		STORM DRAIN
COMM	COMM	BURIED COMMUNICATION
	OHE	OVERHEAD POWER LINE
UGE	UGE	UNDERGROUND ELECTRIC
GLY		HVAC GLYCOL SUPPLY - RETURN
FUEL		FUEL LINE (BURIED)
	EP	EDGE OF AC PAVEMENT
		EDGE OF TREES
		CLEARING LIMIT
EG		EDGE OF GRAVEL
D/L		SWALE / DRAINAGE WAY
TOP	TOP	TOP SLOPE
	TOE	TOE / BTM SLOPE
		TRANSFORMER
		POLE MOUNTED LIGHT FIXTURE
		HVAC AIR COOLED CHILLER
	P	TELEPHONE PEDESTAL
	PP	POWER POLE
	TP	SOIL TEST PIT
	SSMH	SEWER MANHOLE
FH	FH	FIRE HYDRANT
		WATER VALVE
		STORM DRAIN MH
		CULVERT
		CURB WITHOUT GUTTER
		CONCRETE PAVEMENT / SIDEWALK / LANDING
		PROXY HANDICAP PARKING SYMBOL
		BUILDING FOOTPRINT WITH OVERHANG
		PROXY BOUNDARY FOR PARKING STALL
		BOLLARD
		PROPERTY MONUMENT
2.0%		DRAINAGE DIRECTION
525		GRADE / COORDINATE POINT
		REGULATORY/TRAFFIC SIGN
75'	75'	CONTOUR
		RIP RAP

ABBREVIATIONS

AC	ASPHALT CONCRETE PAVEMENT
AKA	ALSO KNOWN AS
ALCAP	STANDARD ALUMINUM SURVEY CAP
APPROX	APPROXIMATE
∠	ANGLE
AST	ABOVE GROUND FUEL STORAGE TANK
BLDG	BUILDING
BTM, BOTT	BOTTOM
CBJ	CITY & BOROUGH OF JUNEAU
CBY	CITY & BOROUGH OF YAKUTAT
CFHR	CUBIC FEET PER HOUR
CFS	CUBIC FEET PER SECOND
CI	CAST IRON
C	CENTERLINE
CL	CLASS
CMP	CORRUGATED METAL PIPE
COMM	COMMUNICATION CABLE
CONC	CONCRETE
CPP	CORRUGATED POLYETHYLENE PIPE
DEMO	DEMOLISH
DIA, Ø	DIAMETER
DI, DIP	DUCTILE IRON, DUCTILE IRON PIPE
DR	DIMENSION RATIO
DTL	DETAIL
EA	EACH
EG	EXISTING GRADE, EDGE GRAVEL
EL, ELEV	ELEVATION
ELEC	ELECTRIC, ELECTRICAL
EP	EDGE OF PAVEMENT
E, EX, EXST	EXISTING
FDN	FOUNDATION
FF	FINISH FLOOR ELEVATION
FG	FINISHED GRADE
FH	FIRE HYDRANT
FT	FOOT OR FEET
GLY	GLYCOL / WATER MIXTURE
IJ	ISOLATION JOINT
INV	INVERT
LF	LINEAR FEET
LOS	LINE OF SIGHT
MECH	MECHANICAL
MFR	MANUFACTURER
MH	MANHOLE
MAX	MAXIMUM
MIN	MINIMUM
MJ	MECHANICAL JOINT
NFS	NON FROST SUSCEPTIBLE (SOIL)
NIC	NOT IN CONTRACT
N.T.S., NTS	NOT TO SCALE
O.C., OC	ON CENTER
PC	POINT OF CURVATURE
PE	PLAIN END PIPE OR POLYETHYLENE
PP	POWER POLE
PS	PRESSURE SEWER
PSI	POUNDS PER SQUARE INCH
PVC	POLYVINYL CHLORIDE PIPE
R	RADIUS
SS	SANITARY SEWER
SD	STORM DRAIN
SDCB	SD CATCH BASIN
SDMH	SD MANHOLE
SH	SHOULDER
SHT	SHEET
SSMH	SS MANHOLE
STA	STATION
PP	POWER POLE
PSI	POUNDS PER SQUARE INCH
PVC	POLYVINYL CHLORIDE PIPE
R	RADIUS
TBD	TO BE DETERMINED
W	WATER, WATER LINE
YCHC	YAKUTAT COMMUNITY HEALTH CENTER

PROJECT LOCATION

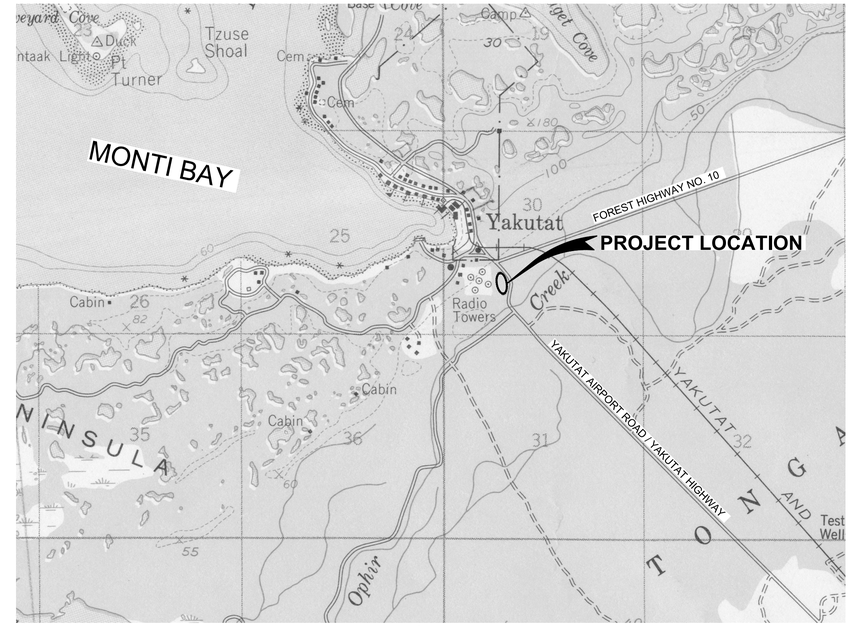

1 C1.1 **PROJECT LOCATION MAP**
SCALE: 1" = 2,000'

N

2000 1000 0 2000 4000 6000
SCALE IN FEET

DETAIL AND SECTION IDENTIFICATION

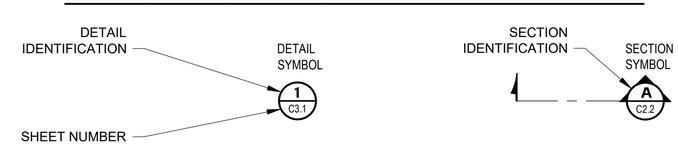

Architects Alaska.
ARCHITECTS ALASKA
AK Corp. Authorization AECC561
900 W. 5th Avenue, Suite 403
Anchorage, Alaska 99501
907.272.3567
191 E. Swanson Avenue, Suite 203
Wasilla, Alaska 99654
907.373.7503
www.architectsalaska.com

PDC ENGINEERS
PLAN • DESIGN • CONSTRUCT
6205 Glacier Highway, Juneau, Alaska 99801
907.780.6060 | AECC605

STATE OF ALASKA 49TH
DAVID BRIAN AREHART
CE 8799
5/14/19
REGISTERED PROFESSIONAL ENGINEER

YAKUTAT COMMUNITY HEALTH CENTER
YAKUTAT, ALASKA

Revisions		
No.	Description	Date

Drawn by HB	Date 13 MAY 2019
Checked DBA	Job No. 17046.01

Sheet Contents
GENERAL NOTES AND LOCATION MAP

Category	Sheet No.
C	1.1

PLOT DATE: 6/14/2019 8:30 AM

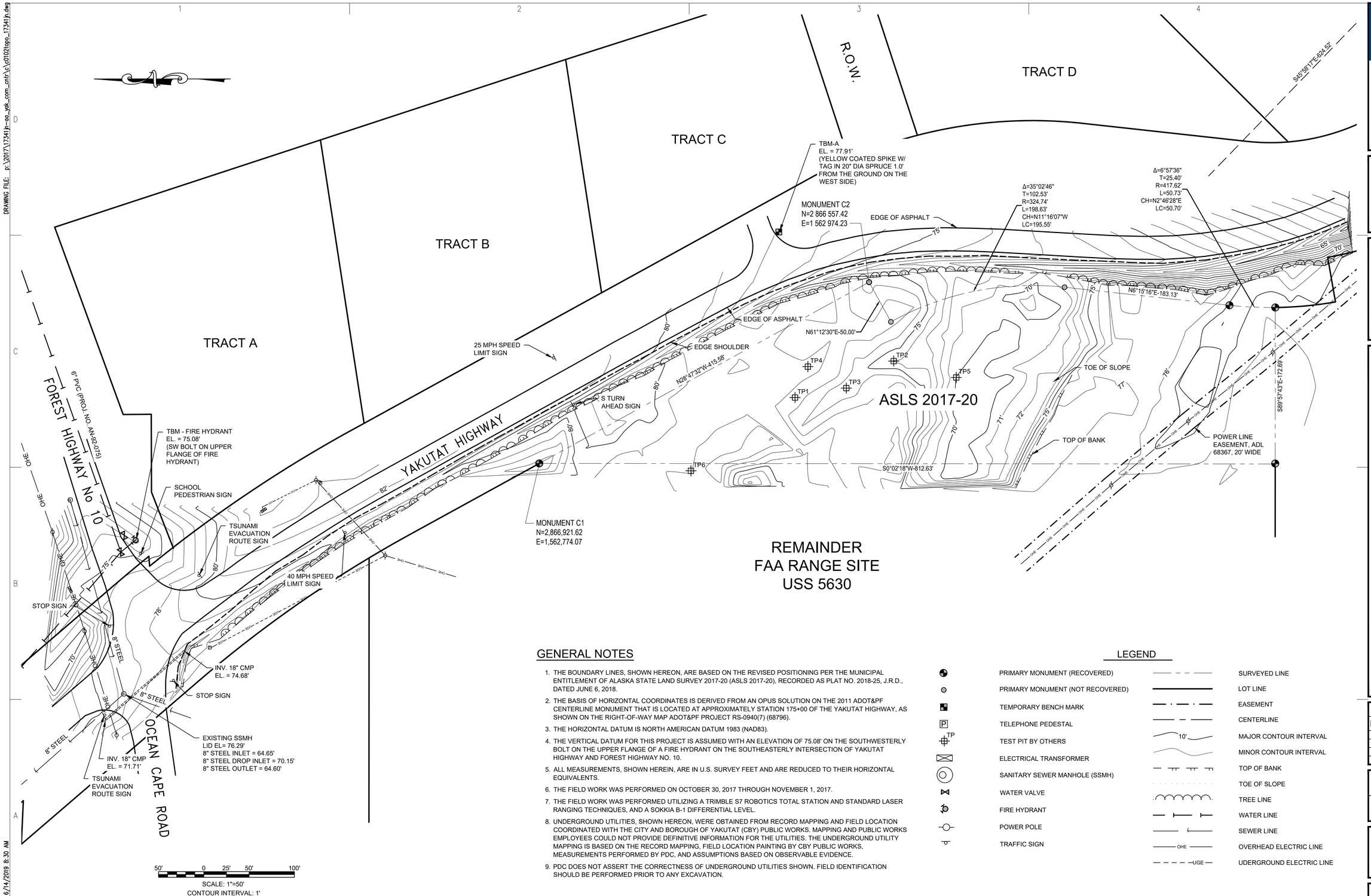

GENERAL NOTES

1. THE BOUNDARY LINES, SHOWN HEREON, ARE BASED ON THE REVISED POSITIONING PER THE MUNICIPAL ENTITLEMENT OF ALASKA STATE LAND SURVEY 2017-20 (ASLS 2017-20), RECORDED AS PLAT NO. 2018-25, J.R.D., DATED JUNE 6, 2018.
2. THE BASIS OF HORIZONTAL COORDINATES IS DERIVED FROM AN OPUS SOLUTION ON THE 2011 ADOT&PF CENTERLINE MONUMENT THAT IS LOCATED AT APPROXIMATELY STATION 175+00 OF THE YAKUTAT HIGHWAY, AS SHOWN ON THE RIGHT-OF-WAY MAP ADOT&PF PROJECT RS-0940(7) (68796).
3. THE HORIZONTAL DATUM IS NORTH AMERICAN DATUM 1983 (NAD83).
4. THE VERTICAL DATUM FOR THIS PROJECT IS ASSUMED WITH AN ELEVATION OF 75.08' ON THE SOUTHWESTERLY BOLT ON THE UPPER FLANGE OF A FIRE HYDRANT ON THE SOUTHEASTERLY INTERSECTION OF YAKUTAT HIGHWAY AND FOREST HIGHWAY NO. 10.
5. ALL MEASUREMENTS, SHOWN HEREIN, ARE IN U.S. SURVEY FEET AND ARE REDUCED TO THEIR HORIZONTAL EQUIVALENTS.
6. THE FIELD WORK WAS PERFORMED ON OCTOBER 30, 2017 THROUGH NOVEMBER 1, 2017.
7. THE FIELD WORK WAS PERFORMED UTILIZING A TRIMBLE S7 ROBOTICS TOTAL STATION AND STANDARD LASER RANGING TECHNIQUES, AND A SOKKIA B-1 DIFFERENTIAL LEVEL.
8. UNDERGROUND UTILITIES, SHOWN HEREON, WERE OBTAINED FROM RECORD MAPPING AND FIELD LOCATION COORDINATED WITH THE CITY AND BOROUGH OF YAKUTAT (CBY) PUBLIC WORKS. MAPPING AND PUBLIC WORKS EMPLOYEES COULD NOT PROVIDE DEFINITIVE INFORMATION FOR THE UTILITIES. THE UNDERGROUND UTILITY MAPPING IS BASED ON THE RECORD MAPPING, FIELD LOCATION PAINTING BY CBY PUBLIC WORKS, MEASUREMENTS PERFORMED BY PDC, AND ASSUMPTIONS BASED ON OBSERVABLE EVIDENCE.
9. PDC DOES NOT ASSERT THE CORRECTNESS OF UNDERGROUND UTILITIES SHOWN. FIELD IDENTIFICATION SHOULD BE PERFORMED PRIOR TO ANY EXCAVATION.

LEGEND

PRIMARY MONUMENT (RECOVERED)	SURVEYED LINE
PRIMARY MONUMENT (NOT RECOVERED)	LOT LINE
TEMPORARY BENCH MARK	EASEMENT
TELEPHONE PEDESTAL	CENTERLINE
TEST PIT BY OTHERS	MAJOR CONTOUR INTERVAL
ELECTRICAL TRANSFORMER	MINOR CONTOUR INTERVAL
SANITARY SEWER MANHOLE (SSMH)	TOP OF BANK
WATER VALVE	TOE OF SLOPE
FIRE HYDRANT	TREE LINE
POWER POLE	WATER LINE
TRAFFIC SIGN	SEWER LINE
	OVERHEAD ELECTRIC LINE
	UDERGROUND ELECTRIC LINE

Architects Alaska.
ARCHITECTS ALASKA
AK Corp. Authorization AECC561
900 W. 5th Avenue, Suite 403
Anchorage, Alaska 99501
907.272.3567
191 E. Swanson Avenue, Suite 203
Wasilla, Alaska 99654
907.373.7503
www.architectsalaska.com

PDC ENGINEERS
PLAN • DESIGN • CONSTRUCT
6205 Glacier Highway, Juneau, Alaska 99801
907.780.6060 | AECC605

STATE OF ALASKA 49TH JASON S. LAMGEN LS # 11759 REGISTERED PROFESSIONAL LAND SURVEYOR
14 JAN., 2019

YAKUTAT COMMUNITY HEALTH CENTER
YAKUTAT, ALASKA

Revisions		
No.	Description	Date

Drawn by ECR	Date 04 DEC 2018
Checked JSL	Job No. 17046.01

Sheet Contents
TOPOGRAPHIC SURVEY
SURVEY CONTROL

Category	Sheet No.
C	1.2

DRAWING FILE: p:\2017\17341\n-oa_yak_com_cntr\c\c0102\topo_17341n.dwg
PLOT DATE: 6/14/2019 8:30 AM

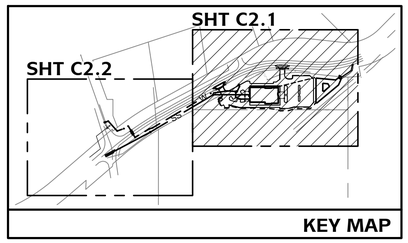

SHEET NOTES

1. THE SITE PLAN IS BASED ON TOPOGRAPHIC SURVEY DATED 11/8/2017 COMPLETED BY PDC ENGINEERS, JUNEAU, ALASKA. THE FIELD WORK WAS PERFORMED DURING THE PERIOD OCTOBER 30, 2017, THROUGH NOVEMBER 1, 2017. INCLUDES 2018 PROPERTY BOUNDARY RESOLUTION.

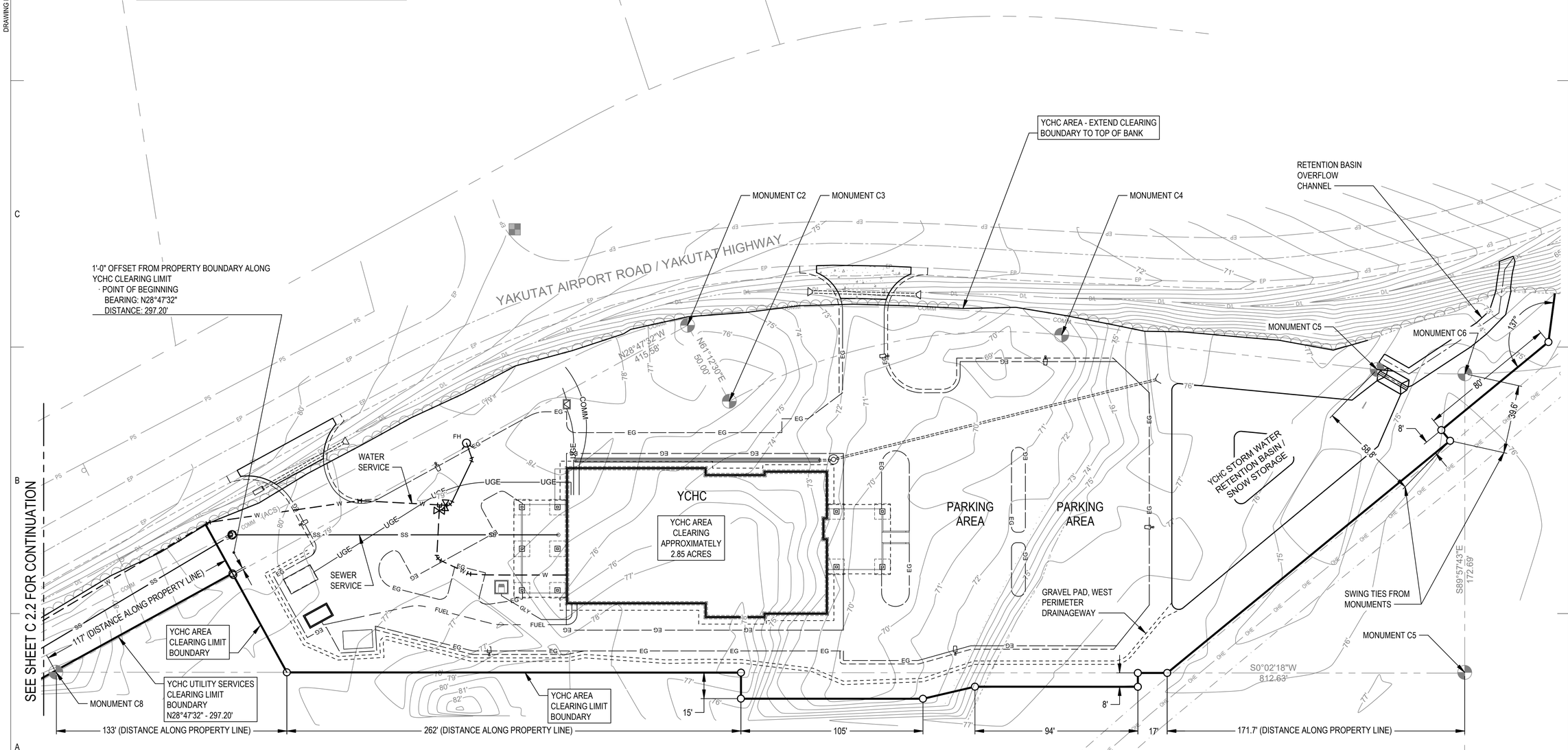

1 / C2.1 **SITE PLAN SOUTH - CLEARING LIMITS YCHC AREA**

SCALE: 1"= 30'

30 15 0 30 60 90
SCALE IN FEET

Architects Alaska.

ARCHITECTS ALASKA
AK Corp. Authorization AECC561

900 W. 5th Avenue, Suite 403
Anchorage, Alaska 99501
907.272.3567

191 E. Swanson Avenue, Suite 203
Wasilla, Alaska 99654
907.373.7503

www.architectsalaska.com

PDC ENGINEERS
PLAN • DESIGN • CONSTRUCT
6205 Glacier Highway, Juneau, Alaska 99801
907.780.6060 | AECC605

STATE OF ALASKA 49TH
DAVID BRIAN AREHART
CE 8799
5/14/19
REGISTERED PROFESSIONAL ENGINEER

YAKUTAT COMMUNITY HEALTH CENTER
YAKUTAT, ALASKA

Revisions		
No.	Description	Date

Drawn by DA	Date 13 MAY 2019
Checked KB	Job No. 17046.01

Sheet Contents
SITE PLAN SOUTH - CLEARING LIMITS

Category	Sheet No.
C	2.1

DRAWING FILE: p:\2017\17341\pe\a_yak_com_cnt\rc\c0201dbsr_17341jn.dwg
PLOT DATE: 6/14/2019 8:30 AM

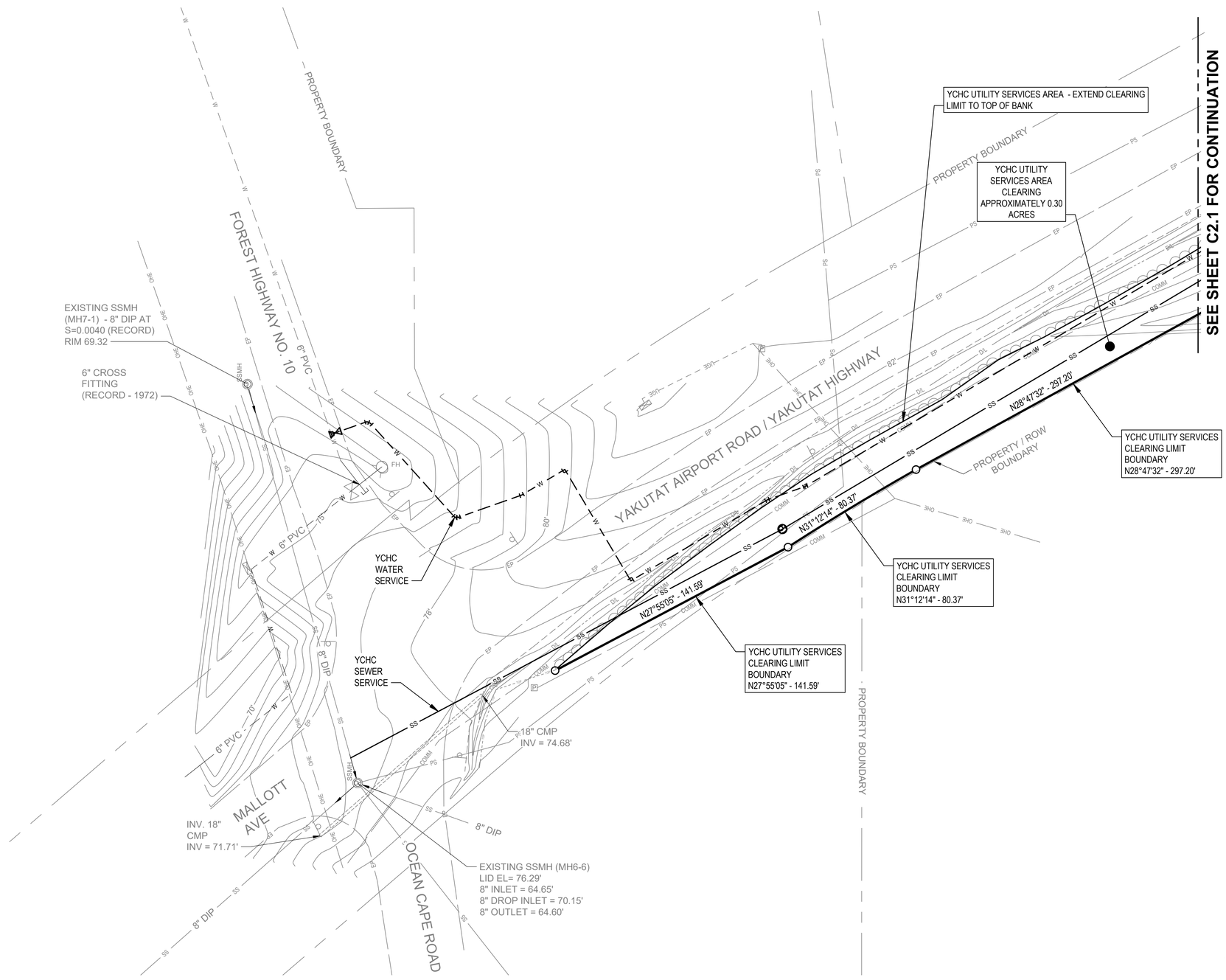

1
C2.2

SITE PLAN NORTH - CLEARING LIMITS YCHC UTILITY SERVICES AREA

SCALE: 1"= 30'

SHEET NOTES

1. THE SITE PLAN IS BASED ON TOPOGRAPHIC SURVEY DATED 11/8/2017 COMPLETED BY PDC ENGINEERS, JUNEAU, ALASKA. THE FIELD WORK WAS PERFORMED DURING THE PERIOD OCTOBER 30, 2017, THROUGH NOVEMBER 1, 2017. INCLUDES 2018 PROPERTY BOUNDARY RESOLUTION.

THE VERTICAL AND HORIZONTAL LOCATION OF THE CLINIC SEWER SERVICE SHOWN ON THE DRAWINGS IS BASED ON TOPOGRAPHIC FIELD SURVEY AND RECORD DRAWINGS. AT LEAST 21 CALENDAR DAYS BEFORE SCHEDULED EXCAVATION ACTIVITY TO INSTALL THE SEWER SERVICE, THE CONTRACTOR SHALL FIELD CONFIRM THE CBY SEWER MAIN ALIGNMENT AND DEPTH BETWEEN MANHOLES MH7-1 AND MH6-6 SHOWN ON DRAWING C2.2. PROVIDE RESULTS OF THESE FIELD MEASUREMENTS TO THE OWNER'S REPRESENTATIVE WITHIN 24 HOURS OF MEASUREMENT.

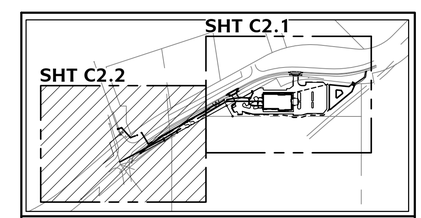

KEY MAP

30 15 0 30 60 90
SCALE IN FEET

Architects Alaska.
ARCHITECTS ALASKA
AK Corp. Authorization AECC561
900 W. 5th Avenue, Suite 403
Anchorage, Alaska 99501
907.272.3567
191 E. Swanson Avenue, Suite 203
Wasilla, Alaska 99654
907.373.7503
www.architectsalaska.com

PDC ENGINEERS
PLAN • DESIGN • CONSTRUCT
6205 Glacier Highway, Juneau, Alaska 99801
907.780.6060 | AECC605

STATE OF ALASKA 49TH
DAVID BRIAN AREHART
CE 8799
5/14/19
REGISTERED PROFESSIONAL ENGINEER

YAKUTAT COMMUNITY HEALTH CENTER
YAKUTAT, ALASKA

Revisions		
No.	Description	Date

Drawn by DA	Date 13 MAY 2019
Checked KB	Job No. 17046.01

Sheet Contents
SITE PLAN NORTH - CLEARING LIMITS

Category	Sheet No.
C	2.2

DRAWING FILE: p:\2017\17341\ps4a_yak_com_cntr\c\2020\dear_17341jn.dwg
PLOT DATE: 6/14/2019 8:30 AM

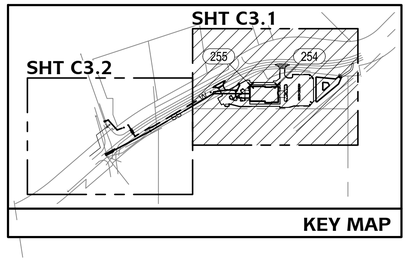

SHEET NOTES

1. THE SITE PLAN IS BASED ON TOPOGRAPHIC SURVEY DATED 11/8/2017 COMPLETED BY PDC ENGINEERS, JUNEAU, ALASKA. THE FIELD WORK WAS PERFORMED DURING THE PERIOD OCTOBER 30, 2017, THROUGH NOVEMBER 1, 2017. INCLUDES 2018 PROPERTY BOUNDARY RESOLUTION.

2 DUAL USE SNOW STORAGE / STORM WATER RETENTION BASIN.

2a LOCALIZED STORM WATER RETENTION BASIN. SEE GRADING PLAN.

3 PEDESTRIAN WALKWAY.

4 STOP SIGN. TYPICAL OF (2). INSTALLED PER ADOT&PF DRIVEWAY PERMIT PLAN SET.

5 TOTAL PARKING STALL COUNT = 54.
   a. (8) STALLS NORTH PARKING AREA.
   b. (46) STALLS SOUTH PARKING AREA.
   c. 9'X18' PARKING STALLS.
   d. 11'X18' VAN ACCESSIBLE PARKING STALL

6 "NO PARKING BETWEEN SIGNS", WITH ARROW, SIGN LOCATED EACH SIDE OF PEDESTRIAN WALKWAY. TYPICAL OF (6). SEE DTL 1, C6.1.

7 "NO PARKING" SIGN FOR HANDICAP LOADING ZONE. TYPICAL OF (1). SEE DTL 1, C6.1.

8 HANDICAP PARKING SIGN, EACH HANDICAP PARKING STALL. TYPICAL OF (3). SEE DTL 1, C6.1.

9 FIRE LANE, NO PARKING SIGN. TYPICAL OF (5). SEE DTL 1, C6.1.

10 SNOW STOCKPILE LIMITS SIGN. TYPICAL OF (6). SEE DTL 2, C6.1.

11 FIELD CAST CONCRETE TRENCH DRAIN WITH AASHT0 H20 TRAFFIC RATED LINEAR TRENCH DRAIN GRATE AND FRAME. SEE DTL 3, C6.4.

12 SNOW STOCKPILE BARRIER. 3'X3'X6' ROCK FILLED GABIONS. (14) BTM COURSE, (9) TOP COURSE.

13 AUXILIARY INFILTRATION AREA. NO SNOW STORAGE.

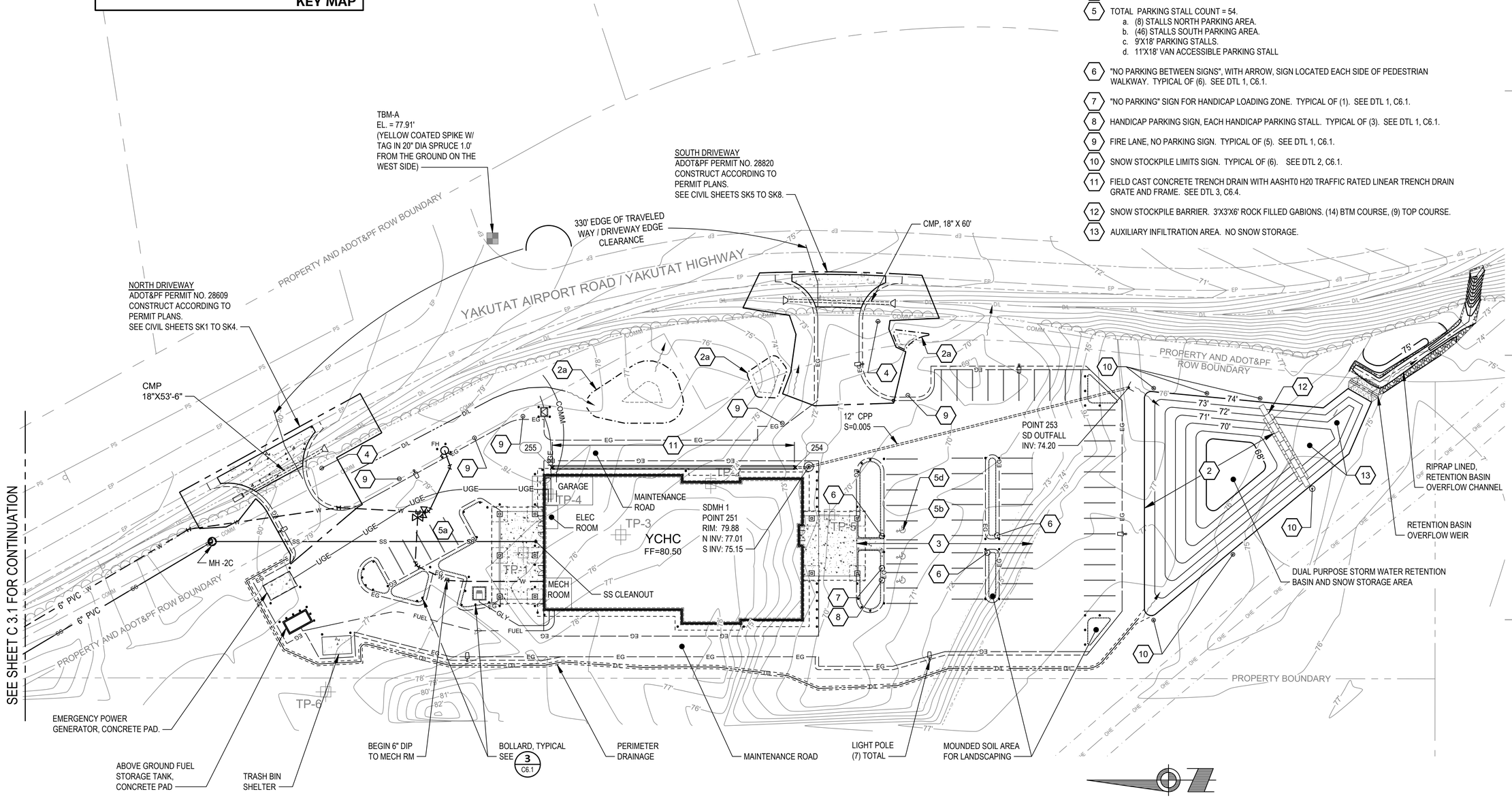

1 C3.1 **SITE PLAN SOUTH - YCHC AREA**
SCALE: 1"= 30'

30 15 0 30 60 90
SCALE IN FEET

Architects Alaska.
ARCHITECTS ALASKA
AK Corp. Authorization AECC561
900 W. 5th Avenue, Suite 403
Anchorage, Alaska 99501
907.272.3567
191 E. Swanson Avenue, Suite 203
Wasilla, Alaska 99654
907.373.7503
www.architectsalaska.com

PDC ENGINEERS
PLAN • DESIGN • CONSTRUCT
6205 Glacier Highway, Juneau, Alaska 99801
907.780.6060 | AECC605

STATE OF ALASKA 49TH
DAVID BRIAN AREHART
CE 8799
5/14/19
REGISTERED PROFESSIONAL ENGINEER

YAKUTAT COMMUNITY HEALTH CENTER
YAKUTAT, ALASKA

Revisions		
No.	Description	Date

Drawn by DA	Date 13 MAY 2019
Checked KB	Job No. 17046.01

Sheet Contents
SITE PLAN SOUTH - YCHC AREA

Category	Sheet No.
C	3.1

DRAWING FILE: p:\2017\17341\n-sa_yak_com_cntr\cd\301site_17341jn.dwg
PLOT DATE: 6/14/2019 8:30 AM

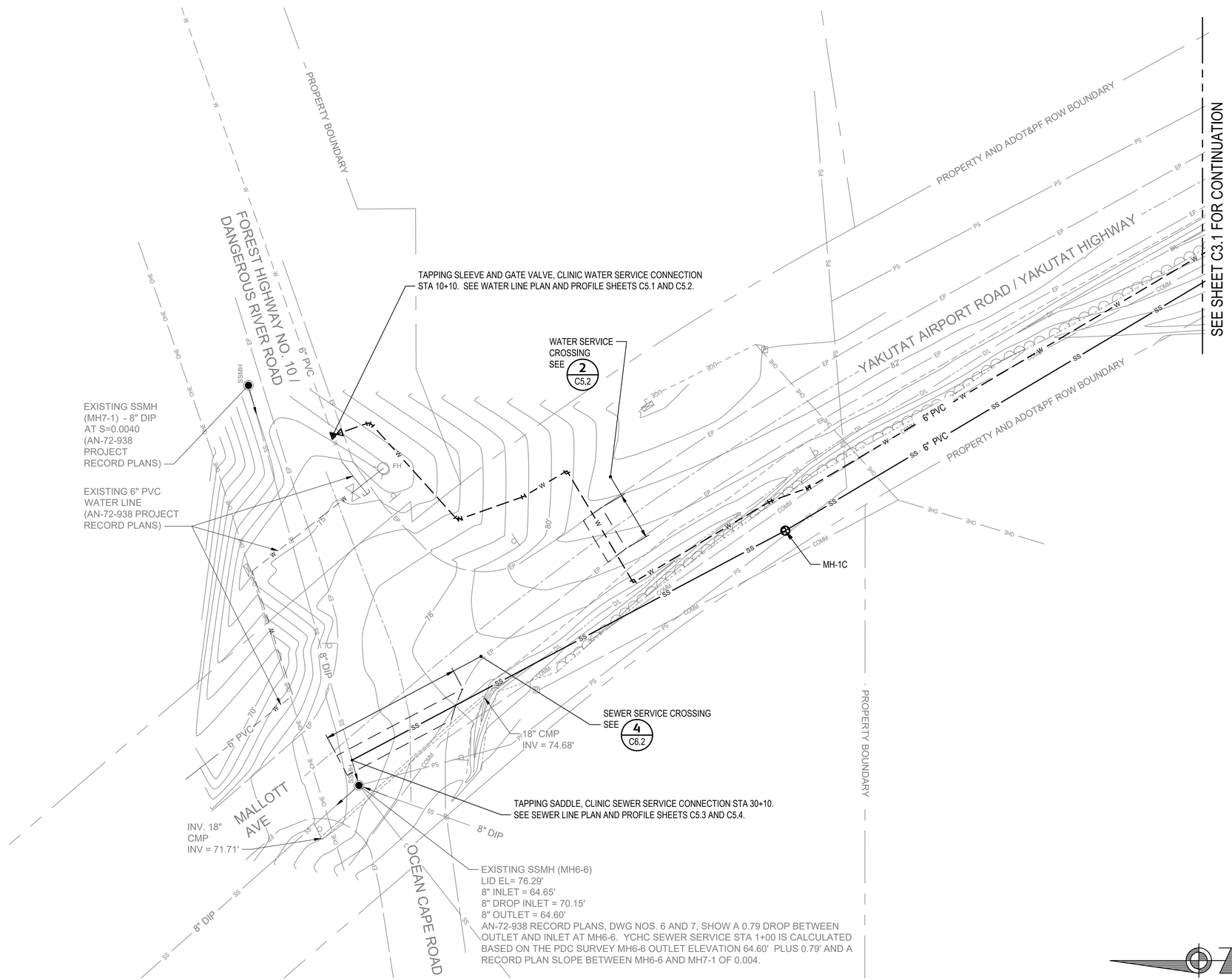

SHEET NOTES

1. RECORD PLAN INFORMATION FOR SEWER MANHOLE 6-6 AND 7-1 IS FROM THE JUNE 22, 1972, ALASKA AREA NATIVE HEALTH SERVICE, WATER AND SEWER PROJECT, JOB NO.: N20.03, PROJECT NO. AN-72-938, PLAN AND PROFILE DRAWING NOS. 6 AND 7.
2. INDIAN HEALTH SERVICE, PROJECT NO. AN-92-075, SANITATION FACILITIES, SHEET NO. C-1, IDENTIFIES THE WATER MAIN ALONG FOREST HIGHWAY AS 6 INCH PVC.
3. THE SITE PLAN IS BASED ON TOPOGRAPHIC SURVEY DATED 11/8/2017 COMPLETED BY PDC ENGINEERS, JUNEAU, ALASKA. THE FIELD WORK WAS PERFORMED DURING THE PERIOD OCTOBER 30, 2017, THROUGH NOVEMBER 1, 2017. INCLUDES 2018 PROPERTY BOUNDARY RESOLUTION.

THE VERTICAL AND HORIZONTAL LOCATION OF THE CLINIC SEWER SERVICE SHOWN ON THE DRAWINGS IS BASED ON TOPOGRAPHIC FIELD SURVEY AND RECORD DRAWINGS. AT LEAST 21 CALENDAR DAYS BEFORE SCHEDULED EXCAVATION ACTIVITY TO INSTALL THE SEWER SERVICE, THE CONTRACTOR SHALL FIELD CONFIRM THE CBY SEWER MAIN ALIGNMENT AND DEPTH BETWEEN MANHOLES MH7-1 AND MH6-6 SHOWN ON DRAWING C2.2. PROVIDE RESULTS OF THESE FIELD MEASUREMENTS TO THE OWNER'S REPRESENTATIVE WITHIN 24 HOURS OF MEASUREMENT.

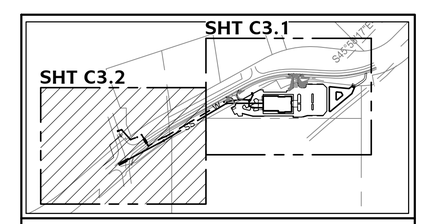

KEY MAP

1 / C3.2 **SITE PLAN NORTH - UTILITIES AREA**

SCALE: 1"= 30'

30 15 0 30 60 90
SCALE IN FEET

Architects Alaska.
ARCHITECTS ALASKA
AK Corp. Authorization AECC561
900 W. 5th Avenue, Suite 403
Anchorage, Alaska 99501
907.272.3567
191 E. Swanson Avenue, Suite 203
Wasilla, Alaska 99654
907.373.7503
www.architectsalaska.com

PDC ENGINEERS
PLAN • DESIGN • CONSTRUCT
6205 Glacier Highway, Juneau, Alaska 99801
907.780.6060 | AECC605

STATE OF ALASKA 49TH
DAVID BRIAN AREHART
CE 8799
5/14/19
REGISTERED PROFESSIONAL ENGINEER

YAKUTAT COMMUNITY HEALTH CENTER
YAKUTAT, ALASKA

Revisions		
No.	Description	Date

Drawn by DA	Date 13 MAY 2019
Checked KB	Job No. 17046.01

Sheet Contents
SITE PLAN NORTH - UTILITIES

Category	Sheet No.
C	3.2

DRAWING FILE: p:\2017\17341\n-aa_yak_com_cntr\cd\302site_17341jn.dwg
PLOT DATE: 6/14/2019 8:31 AM

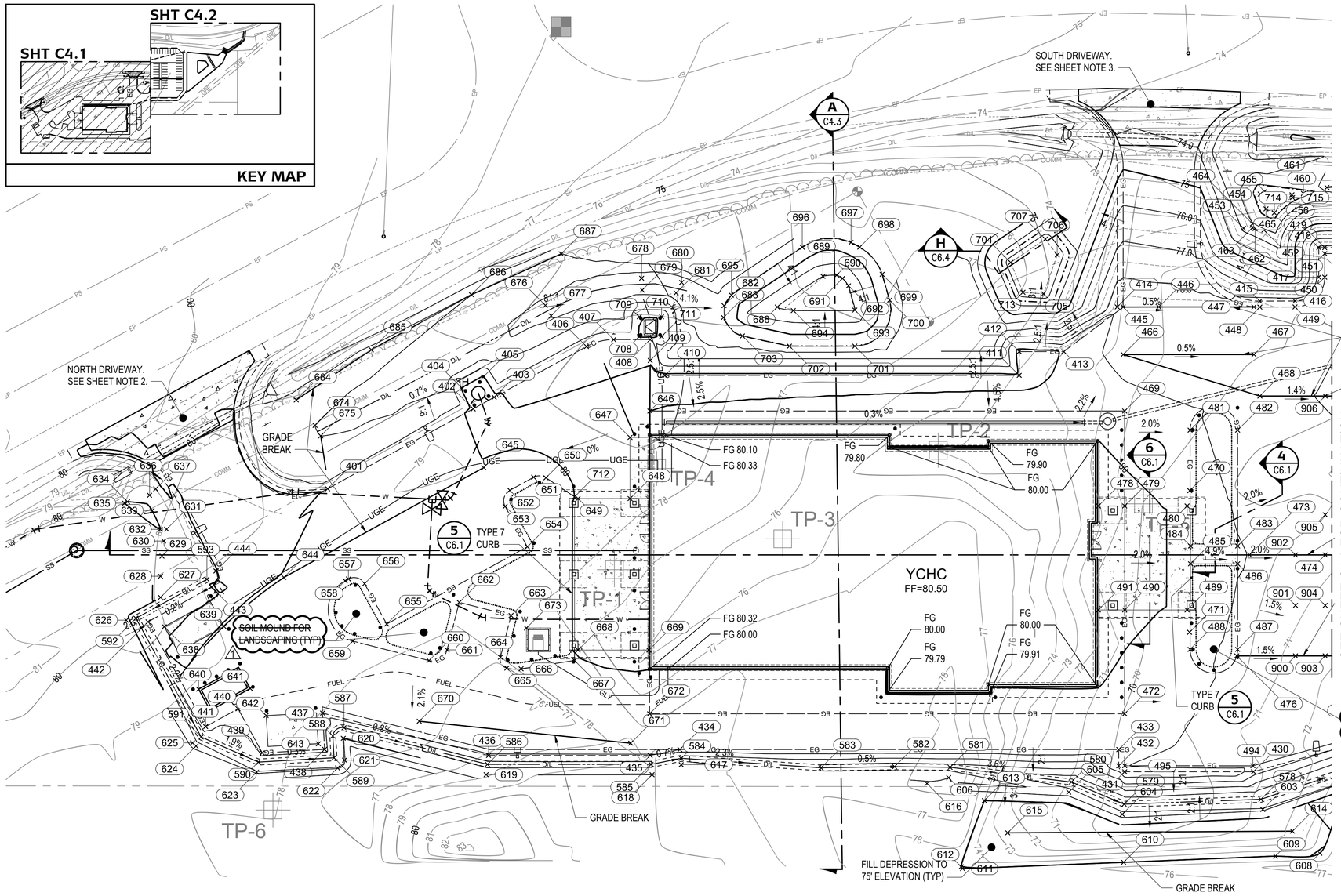

SHEET NOTES

1. SEE SHEET C1.2 FOR BASIS OF VERTICAL AND HORIZONTAL CONTROL.
2. SEE SHEETS C-SK1, SK2, SK3, AND SK4, ADOT&PF REVIEWED PLANS, FOR CONSTRUCTION OF THE NORTH DRIVEWAY.
3. SEE SHEETS SK5, SK6, SK7, AND SK8, ADOT&PF REVIEWED PLANS, FOR CONSTRUCTION OF THE SOUTH DRIVEWAY.

A C4.1 **GRADING PLAN**
SCALE: 1"=20'

20 10 0 20 40 60
SCALE IN FEET

Architects Alaska
ARCHITECTS ALASKA
AK Corp. Authorization AECC561
900 W. 5th Avenue, Suite 403
Anchorage, Alaska 99501
907.272.3567
191 E. Swanson Avenue, Suite 203
Wasilla, Alaska 99654
907.373.7503
www.architectsalaska.com

PDC ENGINEERS
PLAN • DESIGN • CONSTRUCT
6205 Glacier Highway, Juneau, Alaska 99801
907.780.6060 | AECC605

STATE OF ALASKA 49TH DAVID BRIAN AREHART CE 8799 5/15/19 REGISTERED PROFESSIONAL ENGINEER

YAKUTAT COMMUNITY HEALTH CENTER
YAKUTAT, ALASKA

Revisions		
No.	Description	Date
1	SCOPE REDUCTION	14JUN2019
2	ADA GRADING	14JUN2019

Drawn by DS	Date 13 MAY 2019
Checked DA, KB	Job No. 17046.01

Sheet Contents
GRADING PLAN - 1 OF 2

Category	Sheet No.
C	4.1

4/27/18

DRAWING FILE: p:\2017\17341\jn-aia_yak_com_cntr\c\c0401grad_17341jn.dwg
PLOT DATE: 6/14/2019 8:31 AM

DRAWING FILE: p:\2017\17341\pc\a_yak_com_ctr\c\c0401grad_17341jn.dwg

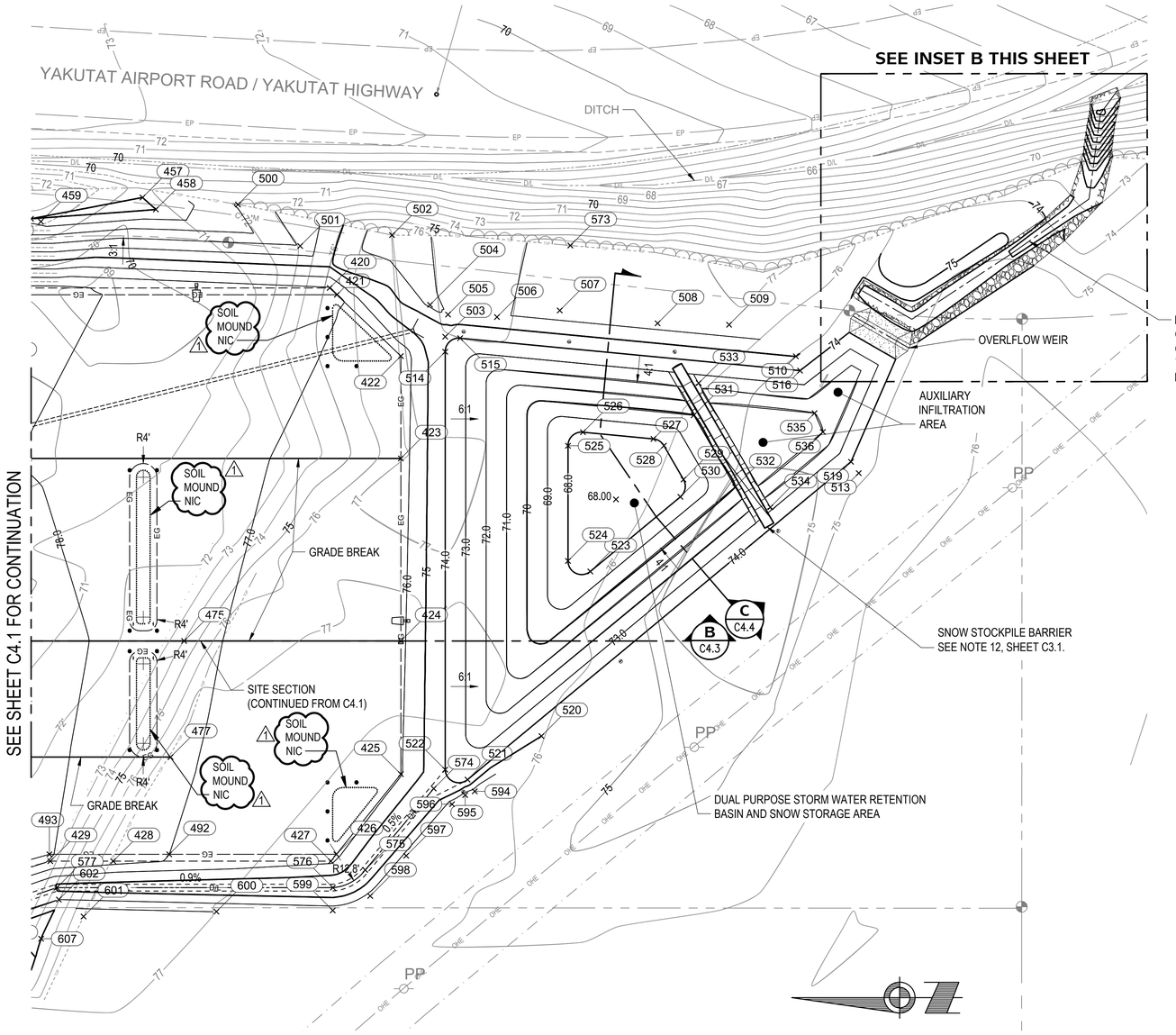

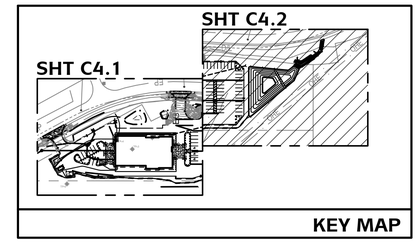

SHEET NOTES

1. SEE SHEET C1.2 FOR BASIS OF VERTICAL AND HORIZONTAL CONTROL.

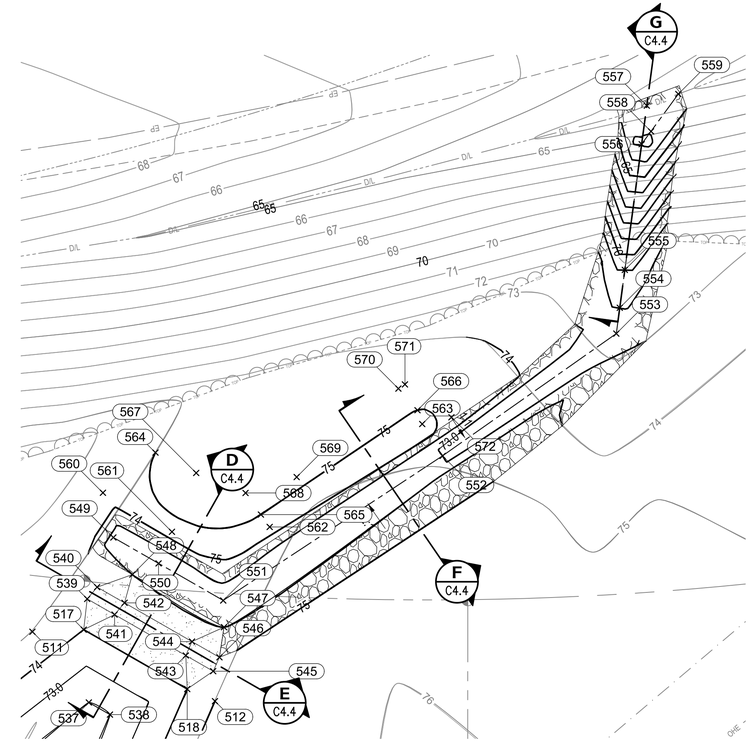

A / C4.2 GRADING PLAN
SCALE: 1"=20'

20 10 0 20 40 60
SCALE IN FEET

B / C4.2 INSET B - GRADING PLAN
SCALE: 1"=10'

10 5 0 10 20 30
SCALE IN FEET

Architects Alaska
ARCHITECTS ALASKA
AK Corp. Authorization AECC561
900 W. 5th Avenue, Suite 403
Anchorage, Alaska 99501
907.272.3567
191 E. Swanson Avenue, Suite 203
Wasilla, Alaska 99654
907.373.7503
www.architectsalaska.com

PDC ENGINEERS
PLAN • DESIGN • CONSTRUCT
6205 Glacier Highway, Juneau, Alaska 99801
907.780.6060 | AECC605

STATE OF ALASKA 49TH DAVID BRIAN AREHART CE 8799 5/15/19 REGISTERED PROFESSIONAL ENGINEER

YAKUTAT COMMUNITY HEALTH CENTER
YAKUTAT, ALASKA

Revisions		
No.	Description	Date
1	SCOPE REDUCTION	14JUN2019

Drawn by DS	Date 13 MAY 2019
Checked DA, KB	Job No. 17046.01

Sheet Contents
GRADING PLAN - 2 OF 2

Category	Sheet No.
C	4.2

PLOT DATE: 6/14/2019 8:31 AM

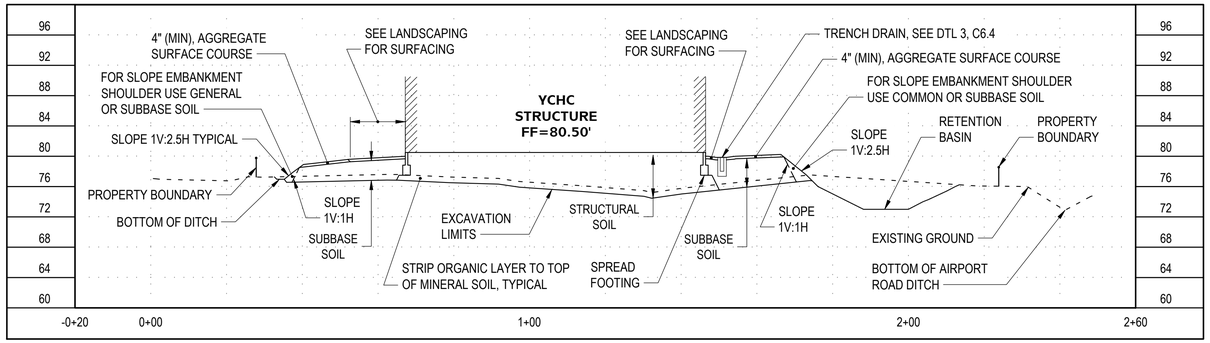

A C4.3 **SITE SECTION: WEST TO EAST**

HORIZONTAL SCALE: 1"=20' VERTICAL SCALE: 1"=10'

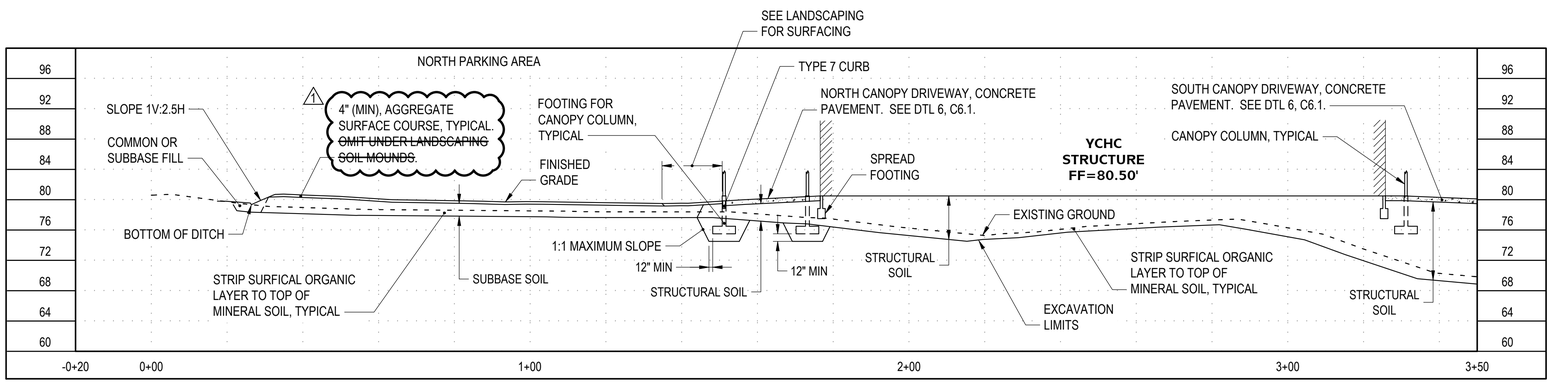

B C4.3 **SITE SECTION: NORTH TO SOUTH - STA: -0+20 TO 3+50**

HORIZONTAL SCALE: 1"=20' VERTICAL SCALE: 1"=10'

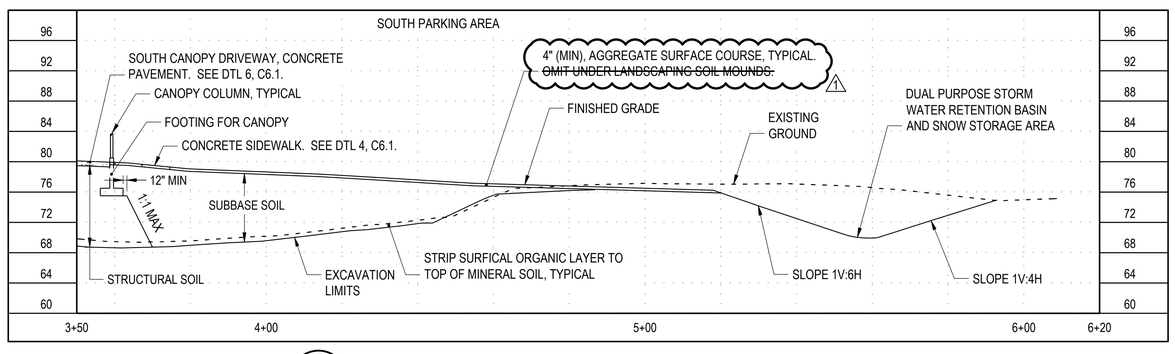

B C4.3 **SITE SECTION (CONTINUED): NORTH TO SOUTH - STA: 3+50 TO 6+20**

HORIZONTAL SCALE: 1"=20' VERTICAL SCALE: 1"=10'

Architects Alaska.

ARCHITECTS ALASKA
AK Corp. Authorization AECC561

900 W. 5th Avenue, Suite 403
Anchorage, Alaska 99501
907.272.3567

191 E. Swanson Avenue, Suite 203
Wasilla, Alaska 99654
907.373.7503

www.architectsalaska.com

PDC ENGINEERS
PLAN • DESIGN • CONSTRUCT
6205 Glacier Highway, Juneau, Alaska 99801
907.780.6060 | AECC605

STATE OF ALASKA 49TH
DAVID BRIAN AREHART
CE 8799
5/14/19
REGISTERED PROFESSIONAL ENGINEER

YAKUTAT COMMUNITY HEALTH CENTER
YAKUTAT, ALASKA

Revisions		
No.	Description	Date
1	SCOPE REDUCTION	14JUN2019

Drawn by DS	Date 13 MAY 2019
Checked DA, KB	Job No. 17046.01

Sheet Contents
EARTHWORK SECTIONS - 1 OF 2

Category	Sheet No.
C	4.3

DRAWING FILE: p:\2017\17341\jn\a_yak_com_cntr\c\c0401grad_17341jn.dwg

PLOT DATE: 6/14/2019 8:31 AM

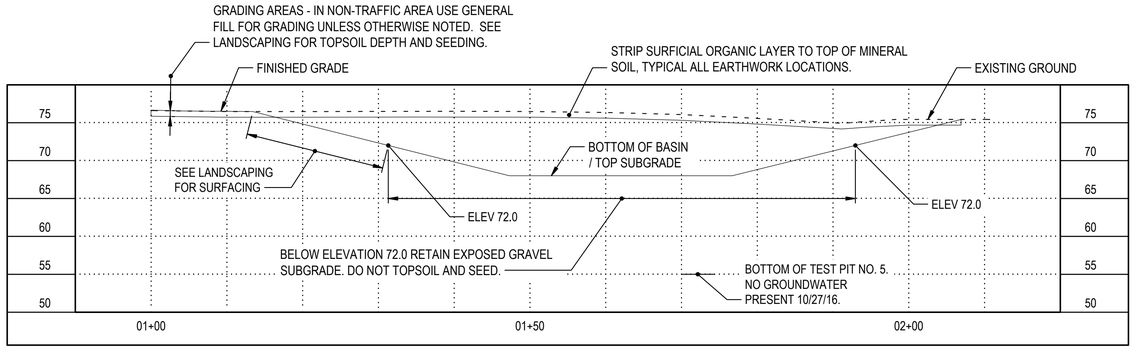

C / C4.4 SECTION: RETENTION BASIN / SNOW STORAGE AREA

HORIZONTAL SCALE: 1"=10' VERTICAL SCALE: 1"=10'

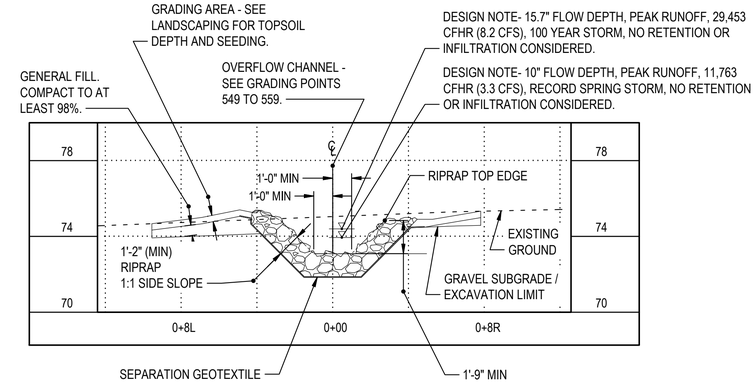

F / C4.4 SECTION: BASIN OVERFLOW CHANNEL

HORIZONTAL SCALE: 1"=4' VERTICAL SCALE: 1"=4'

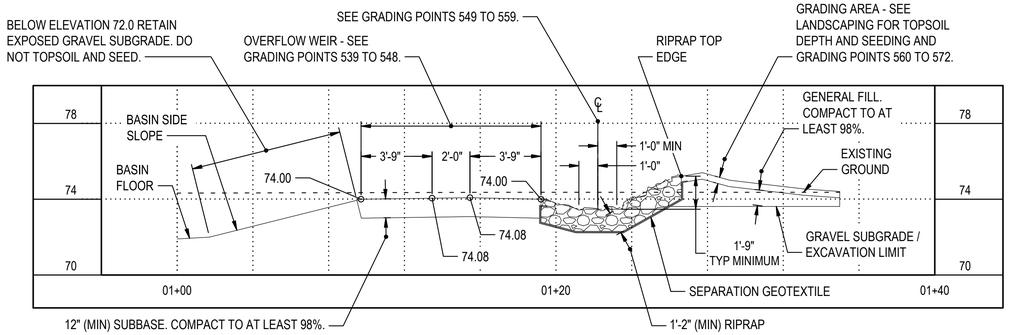

D / C4.4 SECTION: BASIN OVERFLOW WEIR

HORIZONTAL SCALE: 1"=4' VERTICAL SCALE: 1"=4'

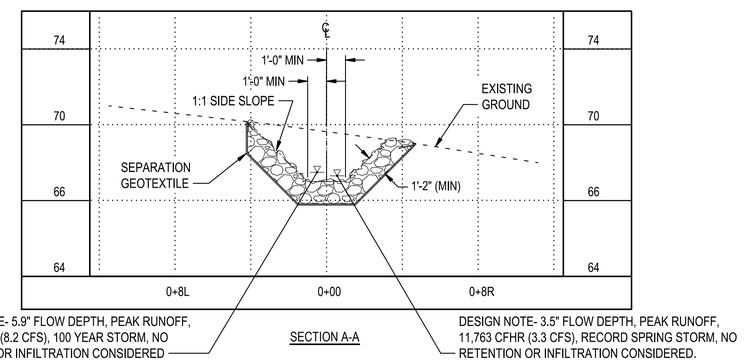

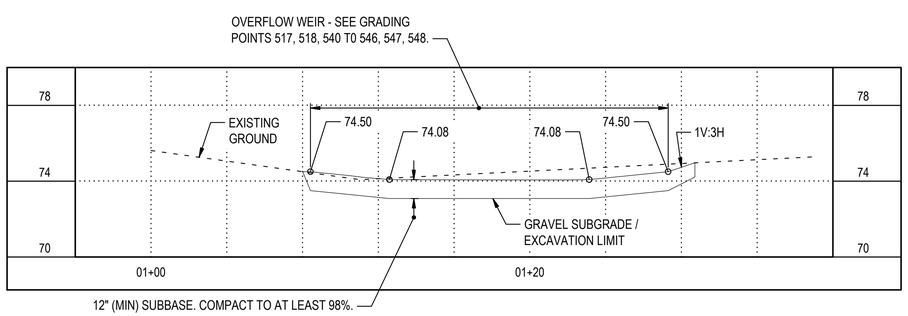

E / C4.4 SECTION: BASIN OVERFLOW WEIR

HORIZONTAL SCALE: 1"=4' VERTICAL SCALE: 1"=4'

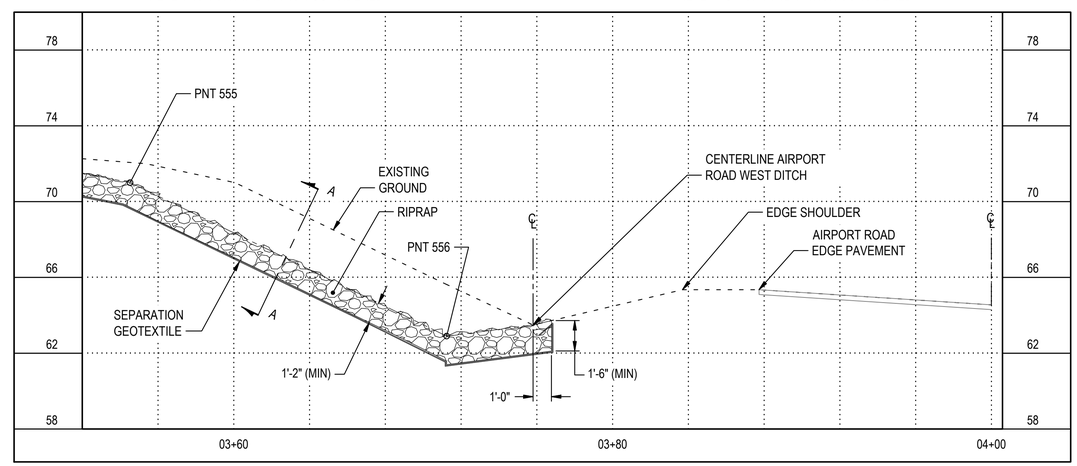

G / C4.4 PROFILE: CHANNEL TO AIRPORT ROAD DITCH

HORIZONTAL SCALE: 1"=4' VERTICAL SCALE: 1"=4'

Architects Alaska.
ARCHITECTS ALASKA
AK Corp. Authorization AECC561
900 W. 5th Avenue, Suite 403
Anchorage, Alaska 99501
907.272.3567
191 E. Swanson Avenue, Suite 203
Wasilla, Alaska 99654
907.373.7503
www.architectsalaska.com

PDC ENGINEERS
PLAN • DESIGN • CONSTRUCT
6205 Glacier Highway, Juneau, Alaska 99801
907.780.6060 | AECC605

STATE OF ALASKA 49TH
DAVID BRIAN AREHART
CE 8799
5/14/19
REGISTERED PROFESSIONAL ENGINEER

YAKUTAT COMMUNITY HEALTH CENTER
YAKUTAT, ALASKA

Revisions		
No.	Description	Date

Drawn by DA, DS	Date 13 MAY 2019
Checked KB, DA	Job No. 17046.01

Sheet Contents
EARTHWORK SECTIONS - 2 OF 2

Category	Sheet No.
C	4.4

DRAWING FILE: p:\2017\17341\n-aa_yak_com_cntr\cio\404sec_17341jn.dwg
PLOT DATE: 6/14/2019 8:32 AM

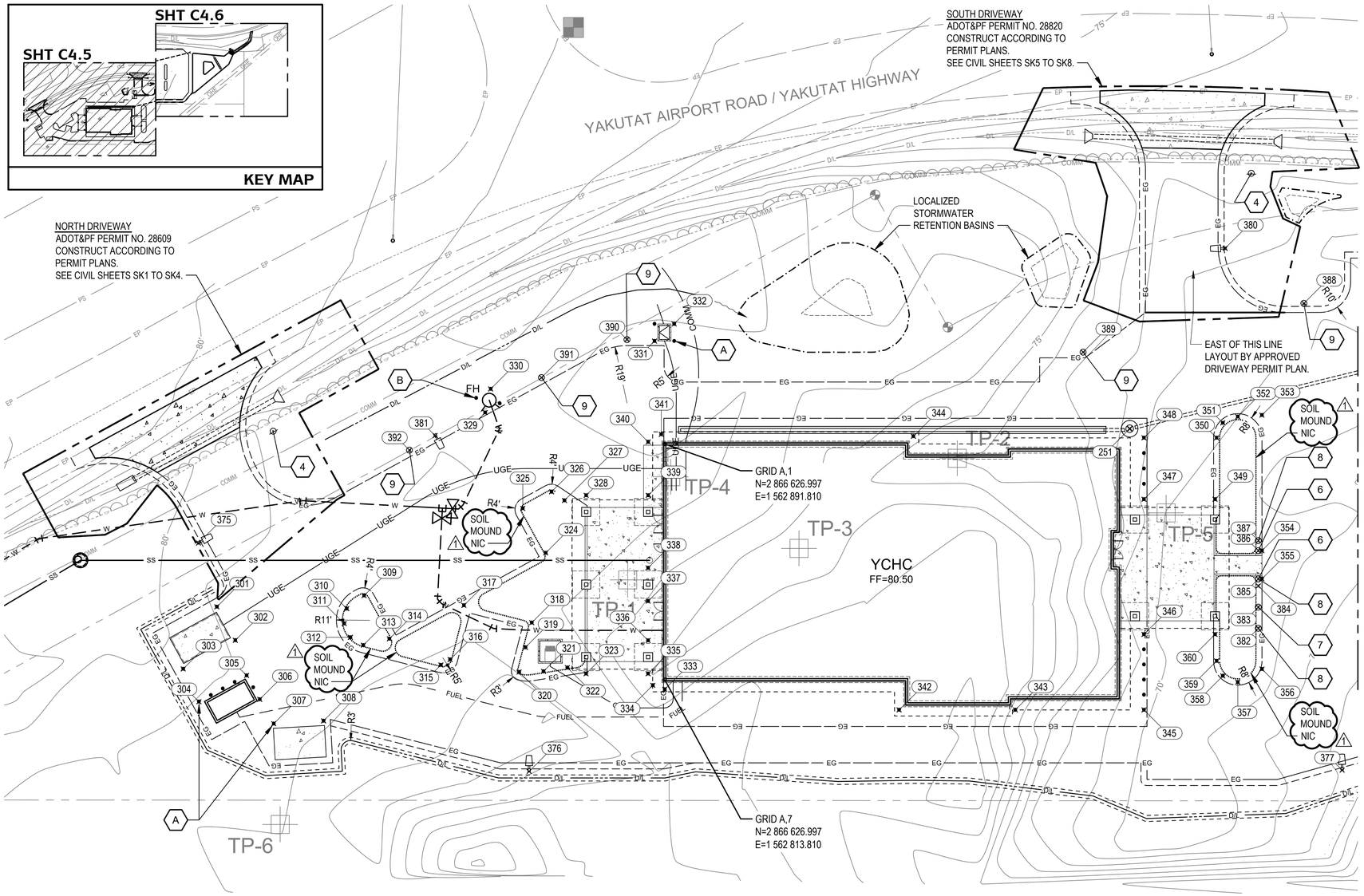

SIGN AND SHEET NOTES

1. SEE SHEET C1.2 FOR THE BASIS OF HORIZONTAL AND VERTICAL CONTROL.

4 STOP SIGN. TYPICAL OF (2). INSTALLED PER ADOT&PF DRIVEWAY PERMIT PLAN SET.

6 "NO PARKING BETWEEN SIGNS", WITH ARROW, SIGN LOCATED EACH SIDE OF PEDESTRIAN WALKWAY. TYPICAL OF (6). SEE DTL 1, C6.1.

7 "NO PARKING" SIGN FOR HANDICAP LOADING ZONE. TYPICAL OF (1). SEE DTL 1, C6.1.

8 HANDICAP PARKING SIGN, EACH HANDICAP PARKING STALL. TYPICAL OF (3). SEE DTL 1, C6.1.

9 FIRE LANE, NO PARKING SIGN. TYPICAL OF (5). SEE DTL 1, C6.1.

A LOCATION OF BOLLARDS FOR DUMPSTER SCREEN, FUEL TANK, GENSET, AND OTHER EQUIPMENT WILL BE DETERMINED BY OFFSETS FROM FINAL DESIGN OF THESE ITEMS.

B SEE DTL 4, SHEET C6.3 FOR FIRE HYDRANT BOLLARD LOCATIONS.

1 C4.5 **GEOMETRIC LAYOUT PLAN**

SCALE: 1"=20'

FOR CLARITY, GRADING CONTOURS ARE NOT SHOWN. SEE SHEET C 4.1 FOR GRADING.

20 10 0 20 40 60
SCALE IN FEET

Architects Alaska.
ARCHITECTS ALASKA
AK Corp. Authorization AECC561
900 W. 5th Avenue, Suite 403
Anchorage, Alaska 99501
907.272.3567
191 E. Swanson Avenue, Suite 203
Wasilla, Alaska 99654
907.373.7503
www.architectsalaska.com

PDC ENGINEERS
PLAN • DESIGN • CONSTRUCT
6205 Glacier Highway, Juneau, Alaska 99801
907.780.6060 | AECC605

STATE OF ALASKA 49TH
DAVID BRIAN AREHART
CE 8799
5/12/19
REGISTERED PROFESSIONAL ENGINEER

YAKUTAT COMMUNITY HEALTH CENTER
YAKUTAT, ALASKA

Revisions

No.	Description	Date
1	SCOPE REDUCTION	14JUN2019

Drawn by DS	Date 13 MAY 2019
Checked DA	Job No. 17046.01

Sheet Contents
GEOMETRIC LAYOUT - 1 OF 2

Category	Sheet No.
C	4.5

DRAWING FILE: p:\2017\17241\n-aa_vak_com_cntr\cis\2407layout_17241n.dwg
PLOT DATE: 6/14/2019 9:32 AM

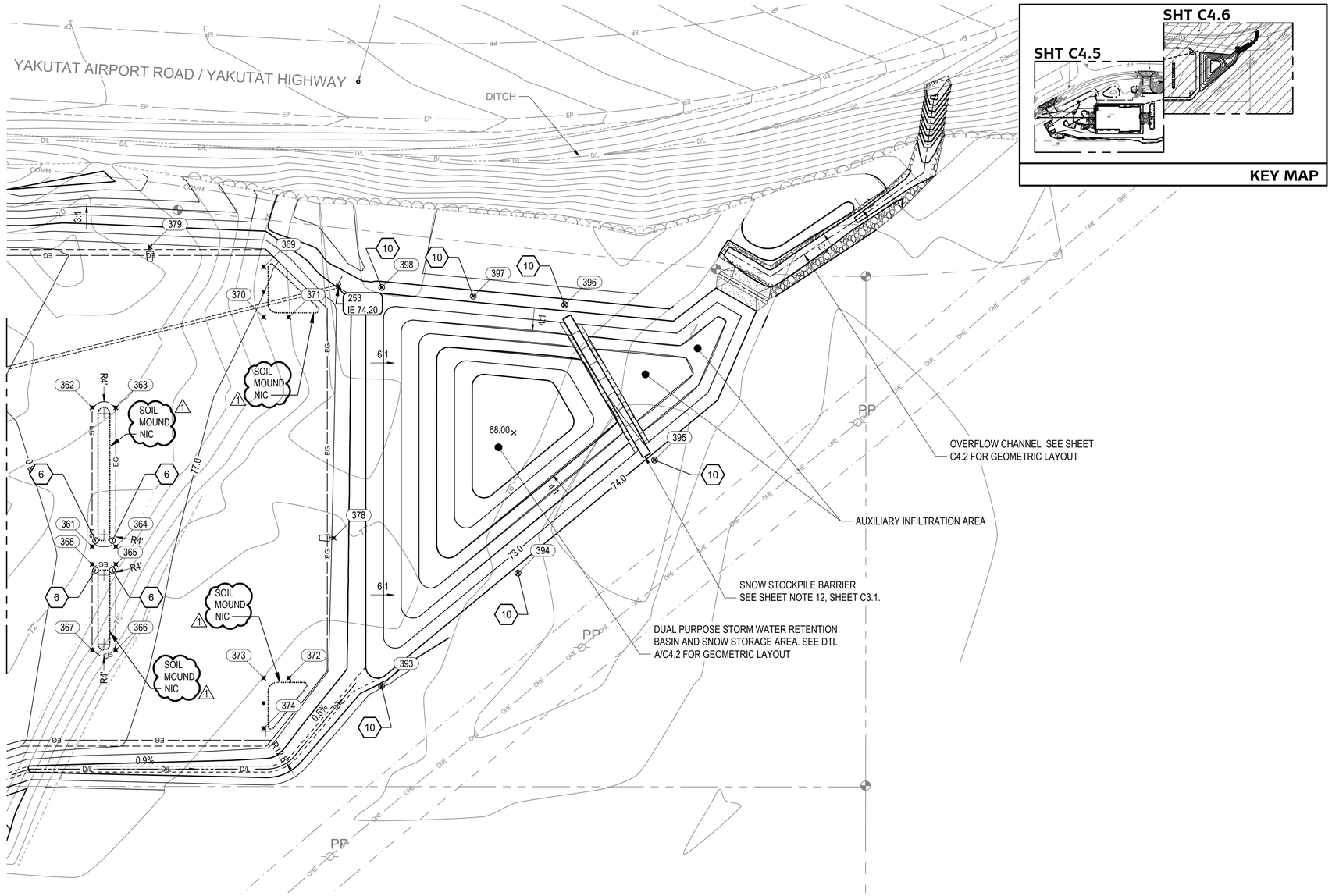

SIGN AND SHEET NOTES

1. SEE SHEET C1.2 FOR THE BASIS OF HORIZONTAL AND VERTICAL CONTROL.

(6) "NO PARKING BETWEEN SIGNS", WITH ARROW, SIGN LOCATED EACH SIDE OF PEDESTRIAN WALKWAY. TYPICAL OF (6). SEE DTL 1, C6.1.

(10) SNOW STOCKPILE LIMITS SIGN. TYPICAL OF (6). SEE DTL 2, C6.1.

XXX

2 C4.6 GEOMETRIC LAYOUT PLAN

SCALE: 1"=20'

20 10 0 20 40 60
SCALE IN FEET

Architects Alaska

ARCHITECTS ALASKA
AK Corp. Authorization AECC561

900 W. 5th Avenue, Suite 403
Anchorage, Alaska 99501
907.272.3567

191 E. Swanson Avenue, Suite 203
Wasilla, Alaska 99654
907.373.7503

www.architectsalaska.com

PDC ENGINEERS
PLAN • DESIGN • CONSTRUCT
6205 Glacier Highway, Juneau, Alaska 99801
907.780.6060 | AECC605

STATE OF ALASKA 49TH
DAVID BRIAN AREHART
CE 8799
5/14/19
REGISTERED PROFESSIONAL ENGINEER

YAKUTAT COMMUNITY HEALTH CENTER
YAKUTAT, ALASKA

Revisions		
No.	Description	Date
1	SCOPE REDUCTION	14JUN2019

Drawn by DS	Date 13 MAY 2019
Checked DA	Job No. 17046.01

Sheet Contents
GEOMETRIC LAYOUT - 2 OF 2

Category	Sheet No.
C	4.6

DRAWING FILE: p:\2017\1734\jn-aa_vak_com_cntr\cic\d40\layout_1734\jn.dwg
PLOT DATE: 6/14/2019 8:32 AM

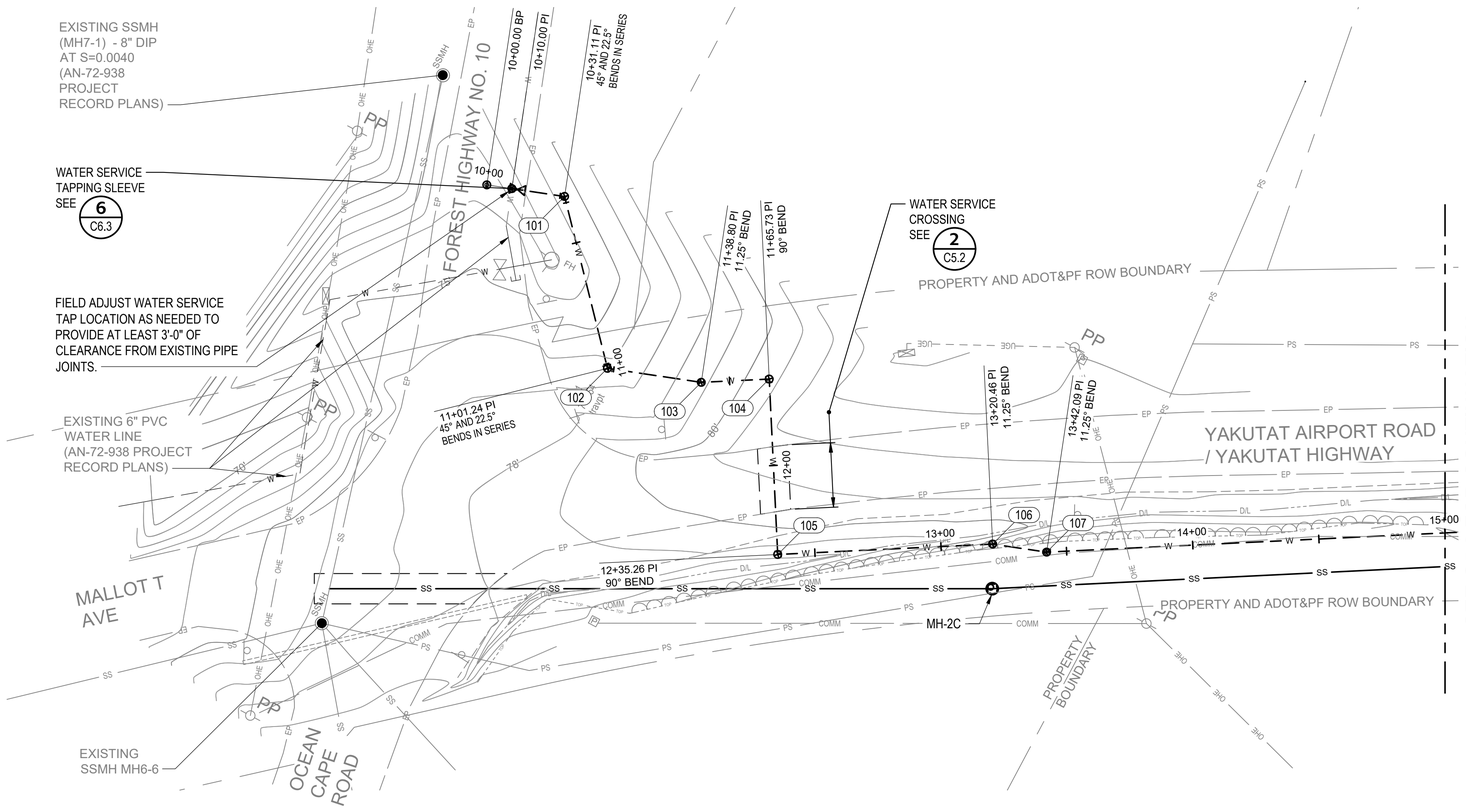

SHEET NOTES

1. SEE SHEET C1.2 FOR BASIS OF HORIZONTAL AND VERTICAL CONTROL.

2. DEFLECT JOINTS AS NEEDED TO MAINTAIN DEPTH (NOT TO EXCEED 1° PER BEND) OR CONTRACTOR MAY INSTALL DEFLECTION COUPLING TO ACCOMMODATE BEND.

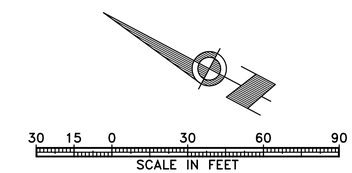

A C5.1 **WATER SERVICE PLAN AND PROFILE**

SCALE: 1"= 30'

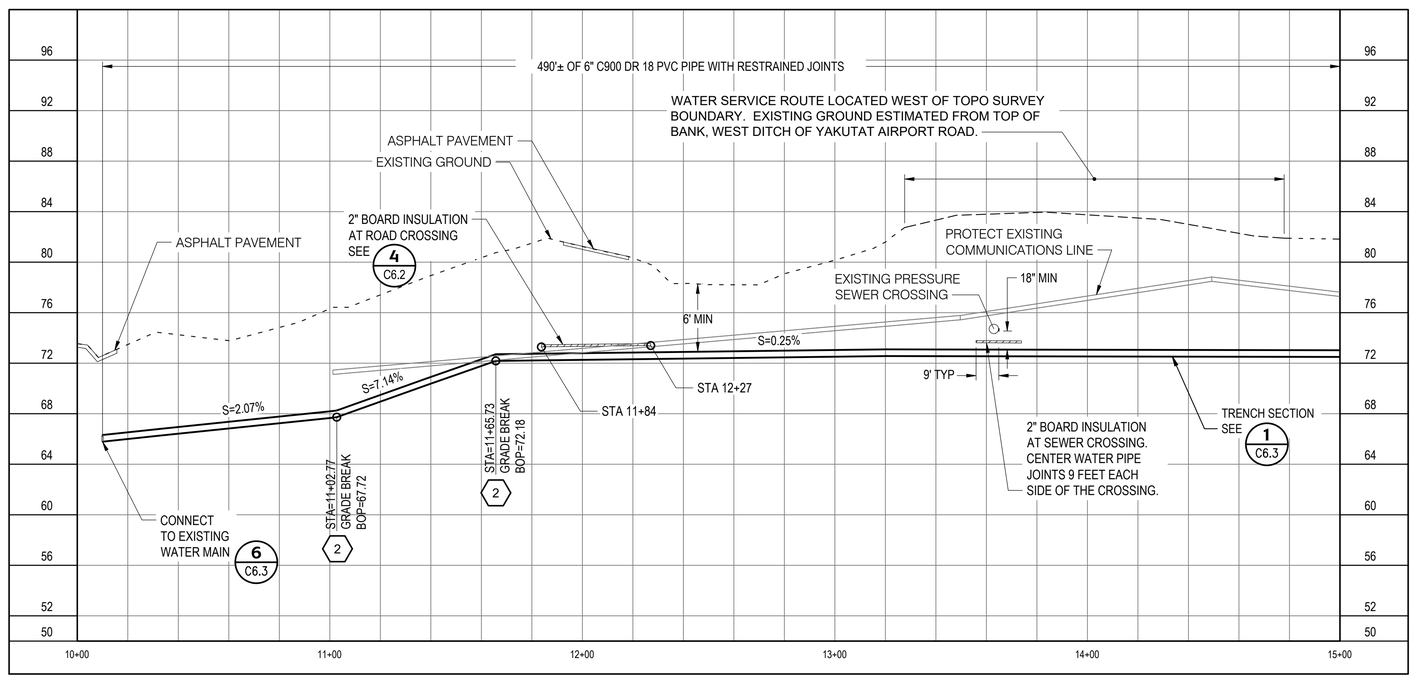

Architects Alaska.

ARCHITECTS ALASKA
AK Corp. Authorization AECC561

900 W. 5th Avenue, Suite 403
Anchorage, Alaska 99501
907.272.3567

191 E. Swanson Avenue, Suite 203
Wasilla, Alaska 99654
907.373.7503

www.architectsalaska.com

PDC ENGINEERS
PLAN • DESIGN • CONSTRUCT
6205 Glacier Highway, Juneau, Alaska 99801
907.780.6060 | AECC605

STATE OF ALASKA
49TH
DAVID BRIAN AREHART
CE 8799
5/14/19
REGISTERED PROFESSIONAL ENGINEER

YAKUTAT COMMUNITY HEALTH CENTER
YAKUTAT, ALASKA

Revisions		
No.	Description	Date

Drawn by NJ	Date 13 MAY 2019
Checked DA, KB	Job No. 17046.01

Sheet Contents
WATER PLAN & PROFILE - 1 OF 2

Category	Sheet No.
C	5.1

DRAWING FILE: p:\2017\17341\n-aia_yak_com_cntr\cd\5901pl&p_17341jn.dwg
PLOT DATE: 6/14/2019 8:32 AM

SHEET NOTES

1. SEE SHEET C1.2 FOR BASIS OF HORIZONTAL AND VERTICAL CONTROL.

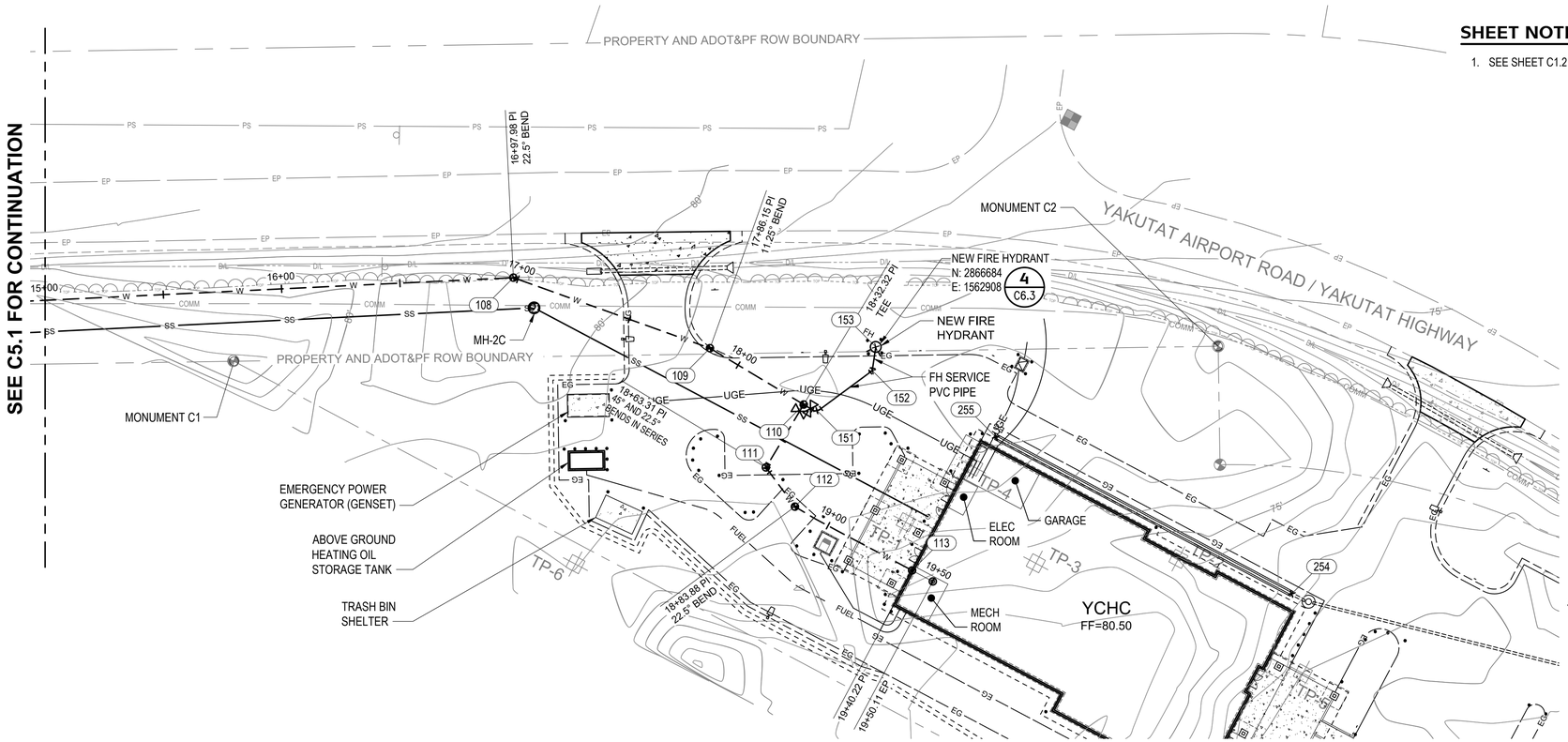

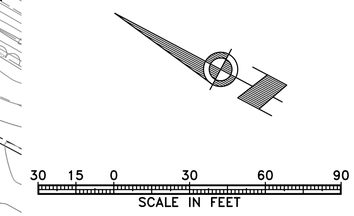

A / C5.2 WATER SERVICE PLAN AND PROFILE

SCALE: 1"= 30'

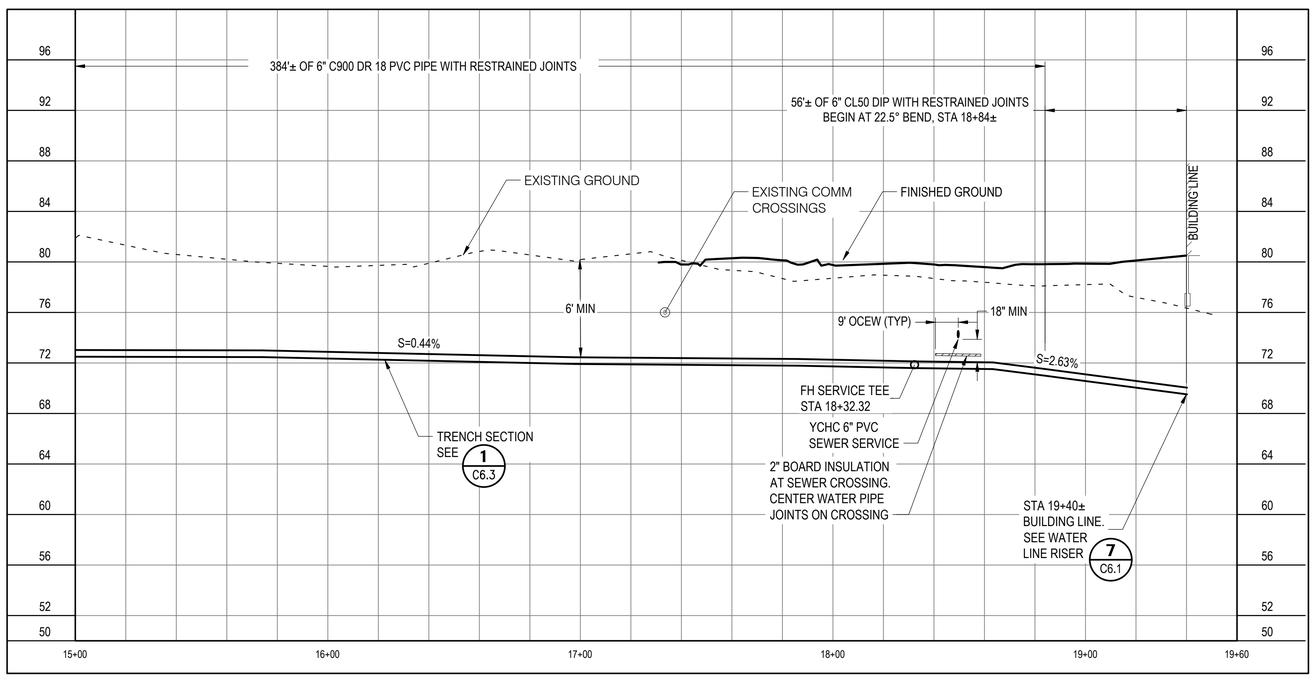

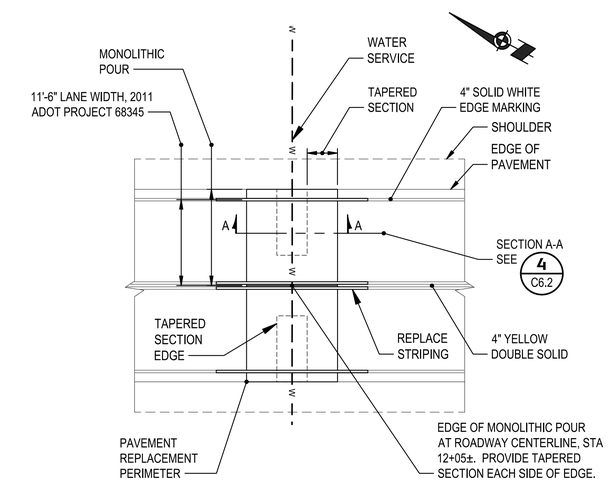

2 / C5.2 WATER SERVICE STA 12+05 AIRPORT ROAD CROSSING - SCHEMATIC

SCALE: NTS

ARCHITECTS ALASKA
AK Corp. Authorization AECC561

900 W. 5th Avenue, Suite 403
Anchorage, Alaska 99501
907.272.3567

191 E. Swanson Avenue, Suite 203
Wasilla, Alaska 99654
907.373.7503

www.architectsalaska.com

PDC ENGINEERS
PLAN • DESIGN • CONSTRUCT
6205 Glacier Highway, Juneau, Alaska 99801
907.780.6060 | AECC605

STATE OF ALASKA 49TH
DAVID BRIAN AREHART
CE 8799
5/14/19
REGISTERED PROFESSIONAL ENGINEER

YAKUTAT COMMUNITY HEALTH CENTER
YAKUTAT, ALASKA

Revisions		
No.	Description	Date

Drawn by NJ	Date 13 MAY 2019
Checked DA, KB	Job No. 17046.01

Sheet Contents
WATER PLAN & PROFILE - 2 OF 2

Category	Sheet No.
C	5.2

DRAWING FILE: p:\2017\17341\n-asa_yak_com_cntr\cd5902p&p_17341jn.dwg
PLOT DATE: 6/14/2019 8:32 AM

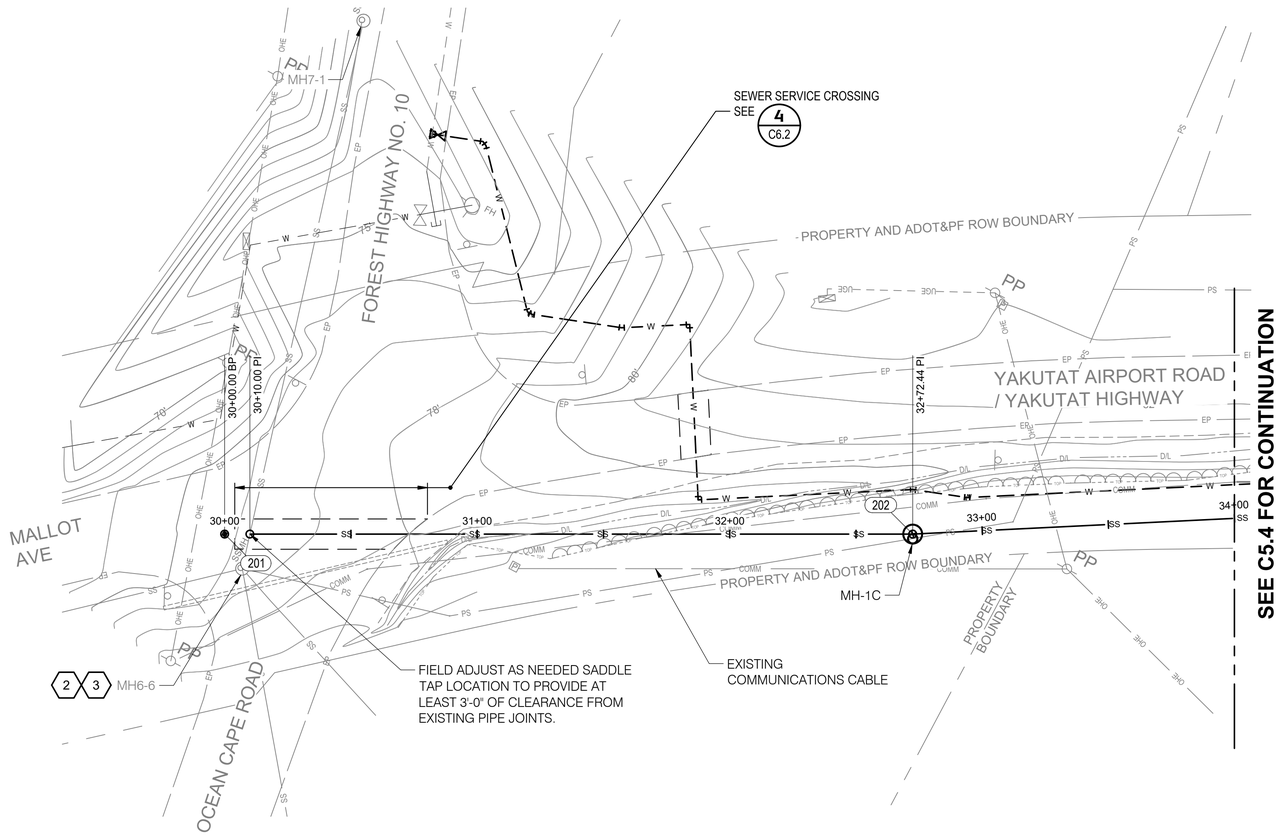

SHEET NOTES

1. SEE SHEET C1.2 FOR BASIS OF HORIZONTAL AND VERTICAL CONTROL.

2. EXISTING SEWER MANHOLE (MH6-6)
LID EL= 76.29'
8" INLET = 64.65'
8" DROP INLET = 70.15'
8" OUTLET = 64.60'
AN-72-938 RECORD PLANS, DWG NOS. 6 AND 7, SHOW A 0.79 DROP BETWEEN OUTLET AND INLET AT MH6-6. YCHC SEWER SERVICE STA 1+00 IS CALCULATED BASED ON THE PDC SURVEY MH6-6 OUTLET ELEVATION 64.60' PLUS 0.79' AND A RECORD PLAN SLOPE BETWEEN MH6-6 AND MH7-1 OF 0.004.

3. FIELD CONFIRM PIPE SLOPE, ELEVATION, AND DIAMETER BETWEEN MH7-1 AND MH6-6 AS DESCRIBED IN THE FOLLOWING NOTE.

THE VERTICAL AND HORIZONTAL LOCATION OF THE CLINIC SEWER SERVICE SHOWN ON THE DRAWINGS IS BASED ON TOPOGRAPHIC FIELD SURVEY AND RECORD DRAWINGS. AT LEAST 21 CALENDAR DAYS BEFORE SCHEDULED EXCAVATION ACTIVITY TO INSTALL THE SEWER SERVICE, THE CONTRACTOR SHALL FIELD CONFIRM THE CBY SEWER MAIN ALIGNMENT AND DEPTH BETWEEN MANHOLES MH7-1 AND MH6-6 SHOWN ON DRAWING C2.2. PROVIDE RESULTS OF THESE FIELD MEASUREMENTS TO THE OWNER'S REPRESENTATIVE WITH 24 HOURS OF MEASUREMENT.

30 15 0 30 60 90
SCALE IN FEET

1 C5.3 **SEWER PLAN & PROFILE**
SCALE: 1"= 30'

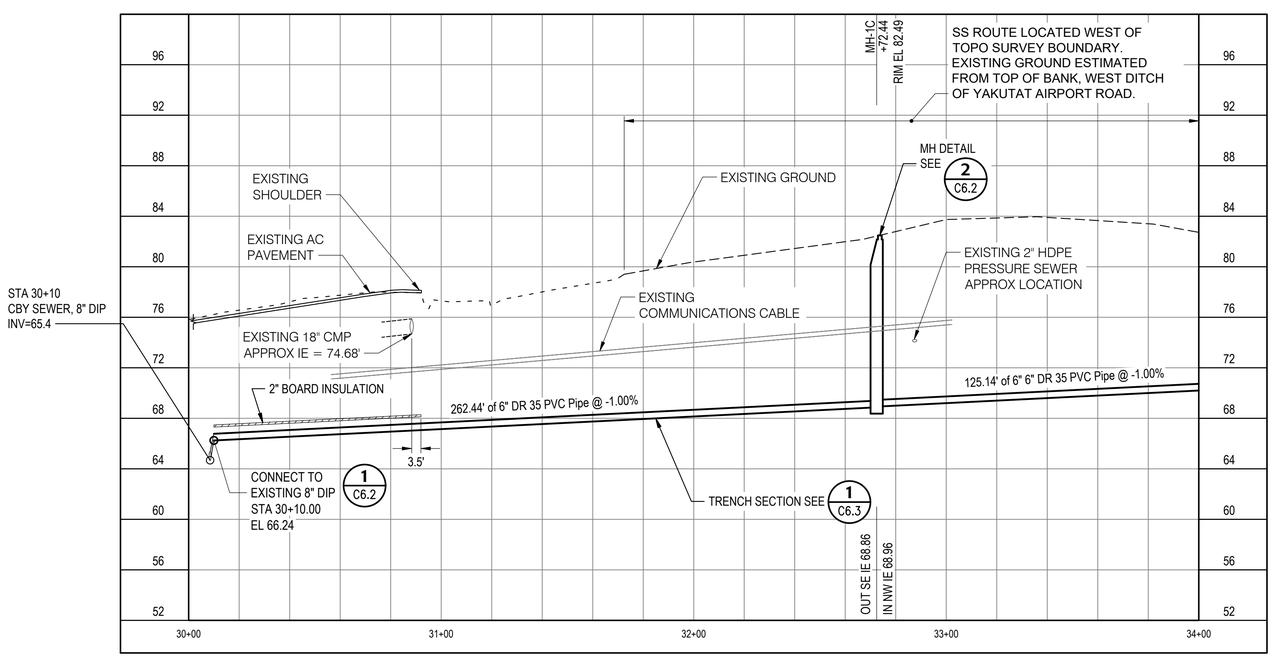

Architects Alaska.
ARCHITECTS ALASKA
AK Corp. Authorization AECC561
900 W. 5th Avenue, Suite 403
Anchorage, Alaska 99501
907.272.3567
191 E. Swanson Avenue, Suite 203
Wasilla, Alaska 99654
907.373.7503
www.architectsalaska.com

PDC ENGINEERS
PLAN • DESIGN • CONSTRUCT
6205 Glacier Highway, Juneau, Alaska 99801
907.780.6060 | AECC605

STATE OF ALASKA 49TH
DAVID BRIAN AREHART
CE 8799
5/14/19
REGISTERED PROFESSIONAL ENGINEER

YAKUTAT COMMUNITY HEALTH CENTER
YAKUTAT, ALASKA

Revisions		
No.	Description	Date

Drawn by NJ	Date 13 MAY 2019
Checked DA, KB	Job No. 17046.01

Sheet Contents
SEWER PLAN & PROFILE - 1 OF 2

Category	Sheet No.
C	5.3

DRAWING FILE: p:\2017\17341\n-aa_yak_com_cntr\cd503p&p_17341n.dwg
PLOT DATE: 6/14/2019 8:33 AM

DRAWING FILE: p:\2017\17341\n-aia_yak_com_cntr\cd\5904p&p_17341jn.dwg

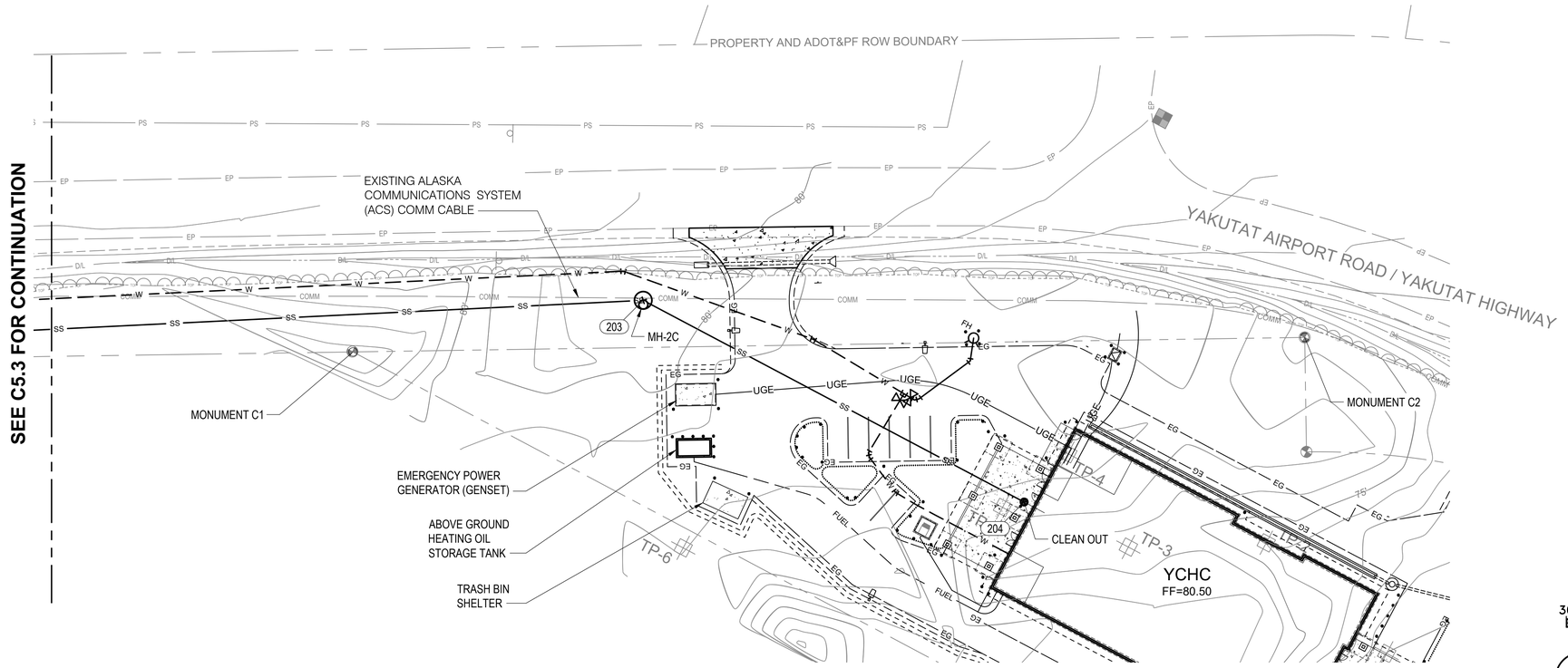

SHEET NOTES

1. SEE SHEET C1.2 FOR BASIS OF HORIZONTAL AND VERTICAL CONTROL.

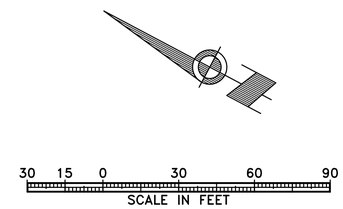

1 / C5.4 **SEWER PLAN & PROFILE**
SCALE: 1"= 30'

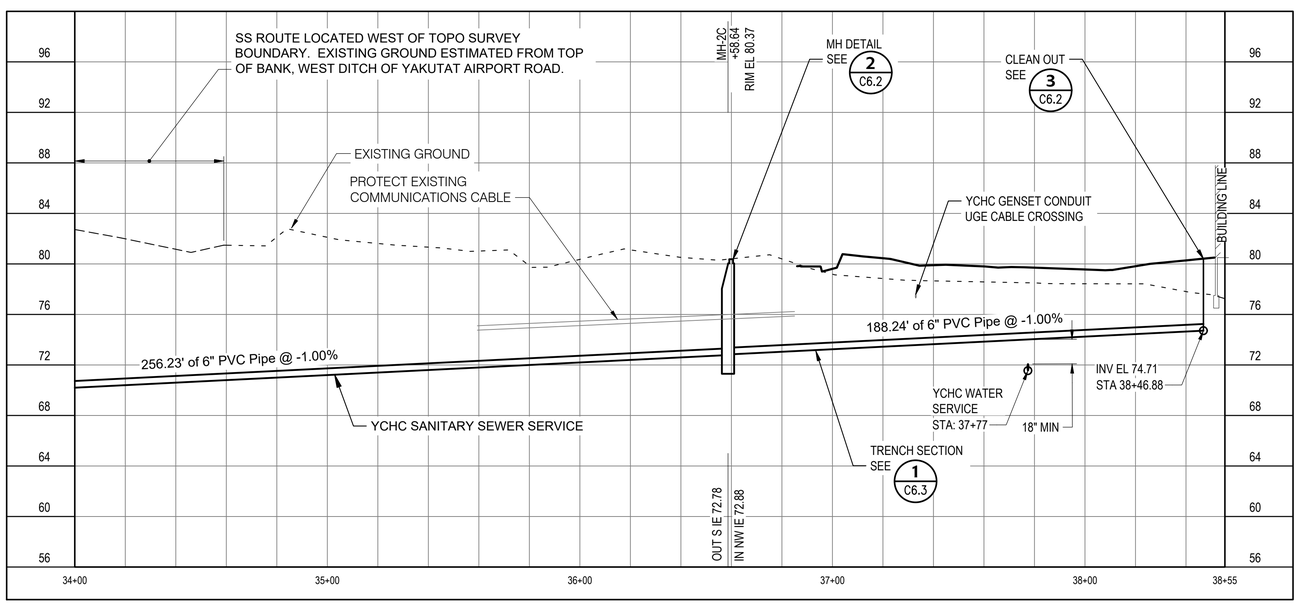

Architects Alaska.
ARCHITECTS ALASKA
AK Corp. Authorization AECC561
900 W. 5th Avenue, Suite 403
Anchorage, Alaska 99501
907.272.3567
191 E. Swanson Avenue, Suite 203
Wasilla, Alaska 99654
907.373.7503
www.architectsalaska.com

PDC ENGINEERS
PLAN • DESIGN • CONSTRUCT
6205 Glacier Highway, Juneau, Alaska 99801
907.780.6060 | AECC605

STATE OF ALASKA 49TH
DAVID BRIAN AREHART
CE 8799
5/14/19
REGISTERED PROFESSIONAL ENGINEER

YAKUTAT COMMUNITY HEALTH CENTER
YAKUTAT, ALASKA

Revisions		
No.	Description	Date

Drawn by NJ	Date 13 MAY 2019
Checked DA, KB	Job No. 17046.01

Sheet Contents
SEWER PLAN & PROFILE - 2 OF 2

Category	Sheet No.
C	5.4

PLOT DATE: 6/14/2019 8:33 AM

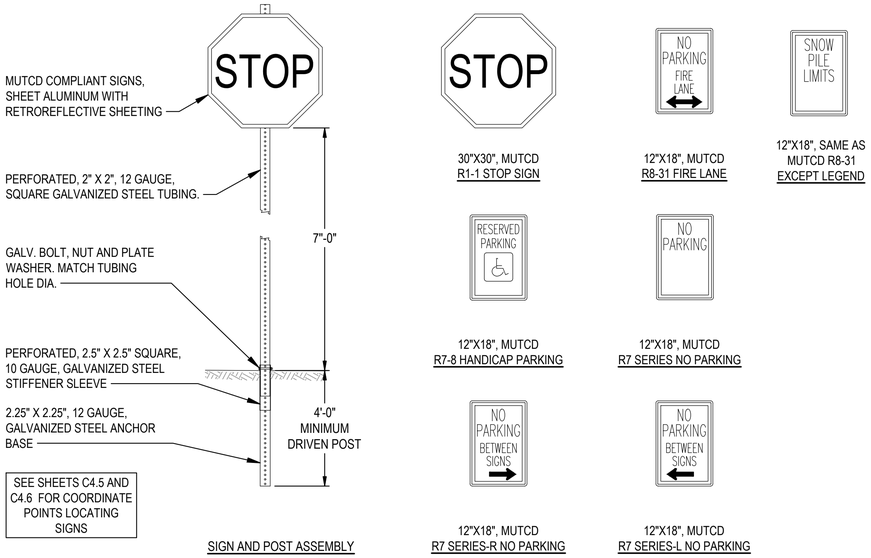

1 TRAFFIC REGULATORY SIGNS
C6.1 SCALE: NTS

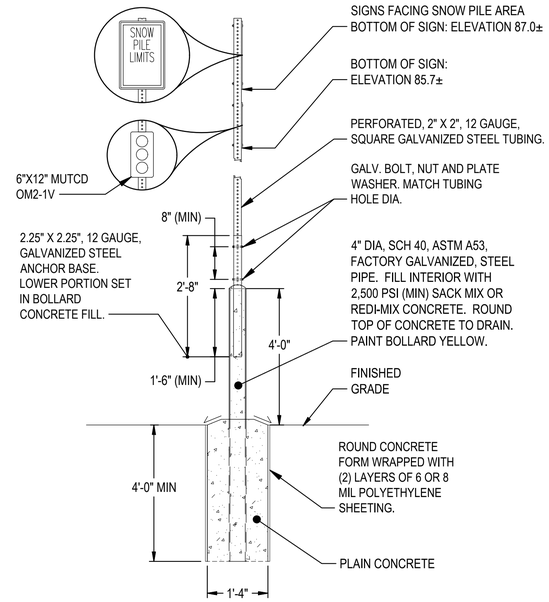

2 SNOW STOCKPILE BOUNDARY MARKER
C6.1 SCALE: NTS

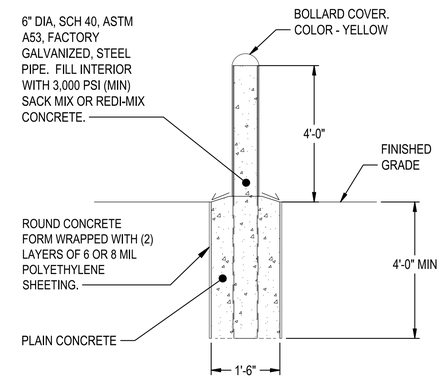

3 TRAFFIC BOLLARD
C6.1 SCALE: NTS

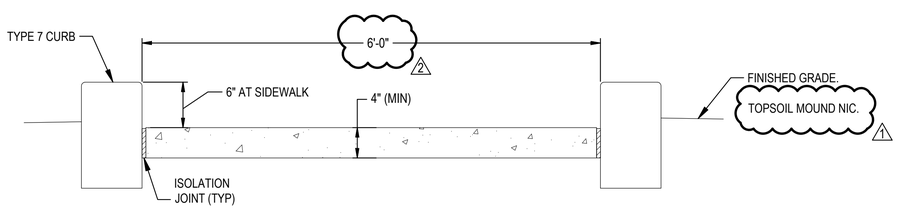

4 CONCRETE SIDEWALK
C6.1 SCALE: NTS

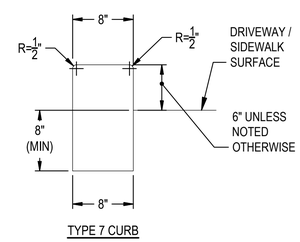

5 CONCRETE CURB
C6.1 SCALE: NTS

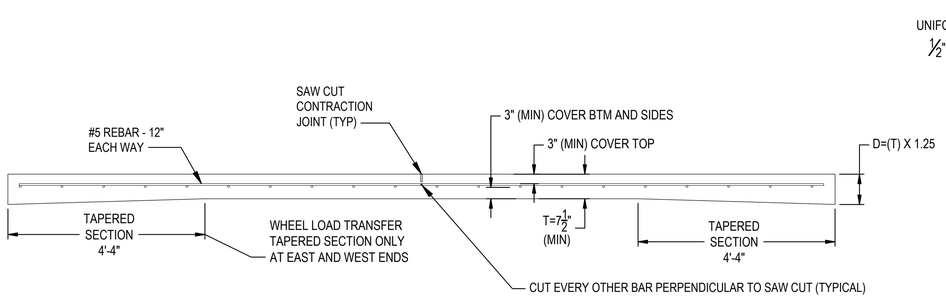

6 CANOPY TRAFFIC PAVEMENT SECTION
C6.1 SCALE: NTS

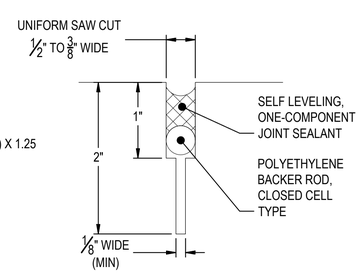

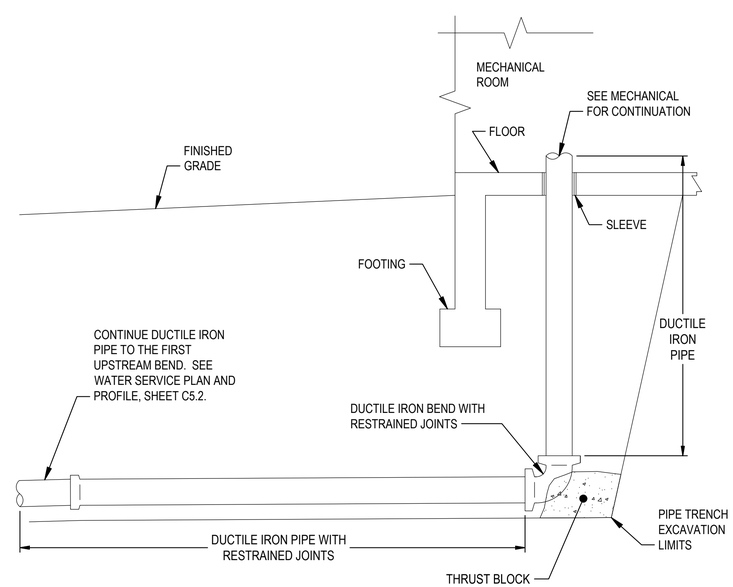

7 WATER SERVICE RISER DETAIL
C6.1 SCALE: NTS

Architects Alaska.
ARCHITECTS ALASKA
AK Corp. Authorization AECC561
900 W. 5th Avenue, Suite 403
Anchorage, Alaska 99501
907.272.3567
191 E. Swanson Avenue, Suite 203
Wasilla, Alaska 99654
907.373.7503
www.architectsalaska.com

PDC ENGINEERS
PLAN • DESIGN • CONSTRUCT
6205 Glacier Highway, Juneau, Alaska 99801
907.780.6060 | AECC605

STATE OF ALASKA 49TH
DAVID BRIAN AREHART
CE 8799
5/15/19
REGISTERED PROFESSIONAL ENGINEER

YAKUTAT COMMUNITY HEALTH CENTER
YAKUTAT, ALASKA

Revisions		
No.	Description	Date
1	SCOPE REDUCTION	14JUN2019
2	MISSING DIMENSION	14JUN2019

Drawn by DA	Date 13 MAY 2019
Checked KB	Job No. 17046.01

Sheet Contents
SITE DETAILS

Category	Sheet No.
C	6.1

DRAWING FILE: p:\2017\17341\jn-aa_yak_com_cnt\cic\0601dtl_17341jn.dwg
PLOT DATE: 6/14/2019 8:33 AM

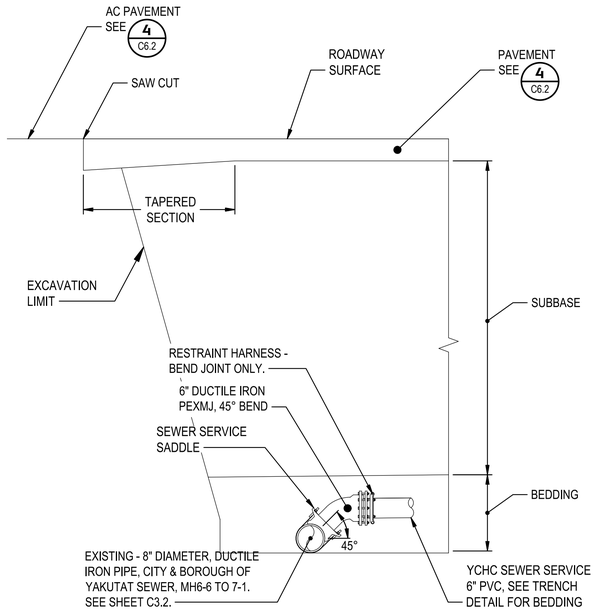

1 C6.2 SEWER SERVICE CONNECTION AT MALLOTT AVE AND AIRPORT ROAD INTERSECTION

SCALE: NTS

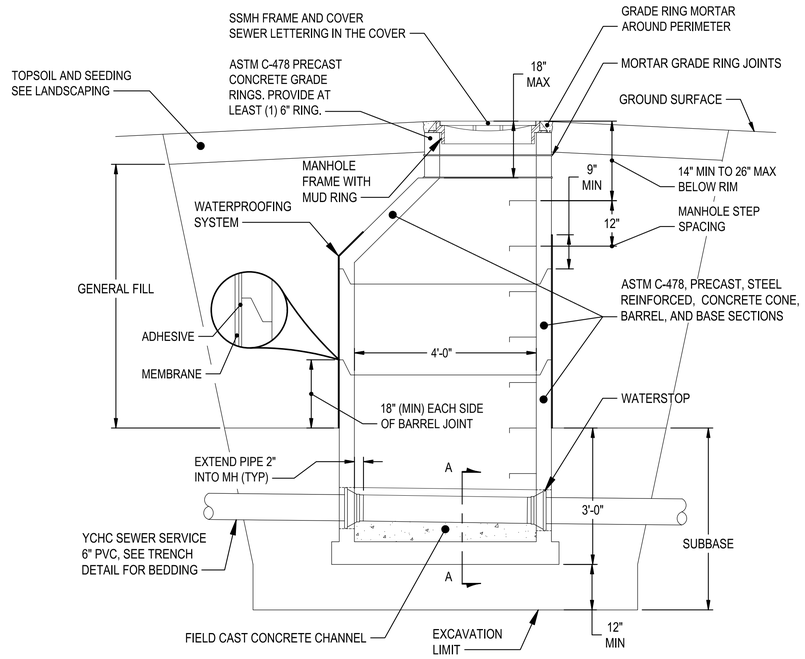

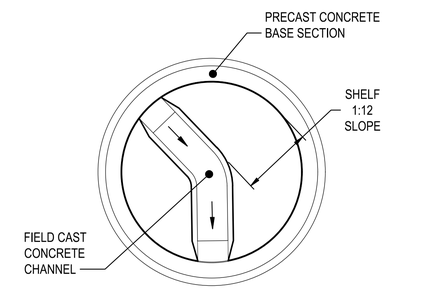

CONCRETE CHANNEL - PLAN VIEW

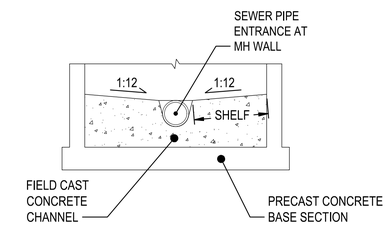

SECTION A-A

2 C6.2 SANITARY SEWER MANHOLE (SSMH)

SCALE: NTS

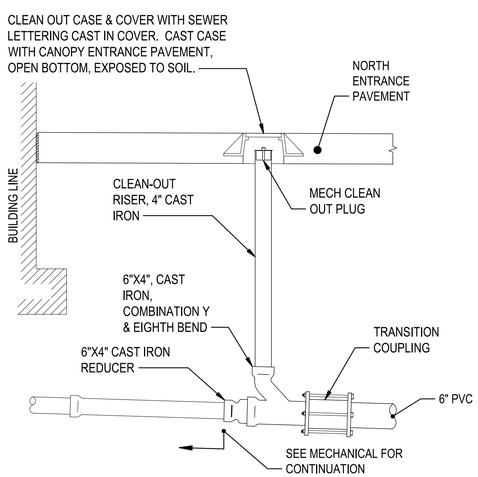

3 C6.2 SEWER SERVICE CLEAN OUT

SCALE: NTS

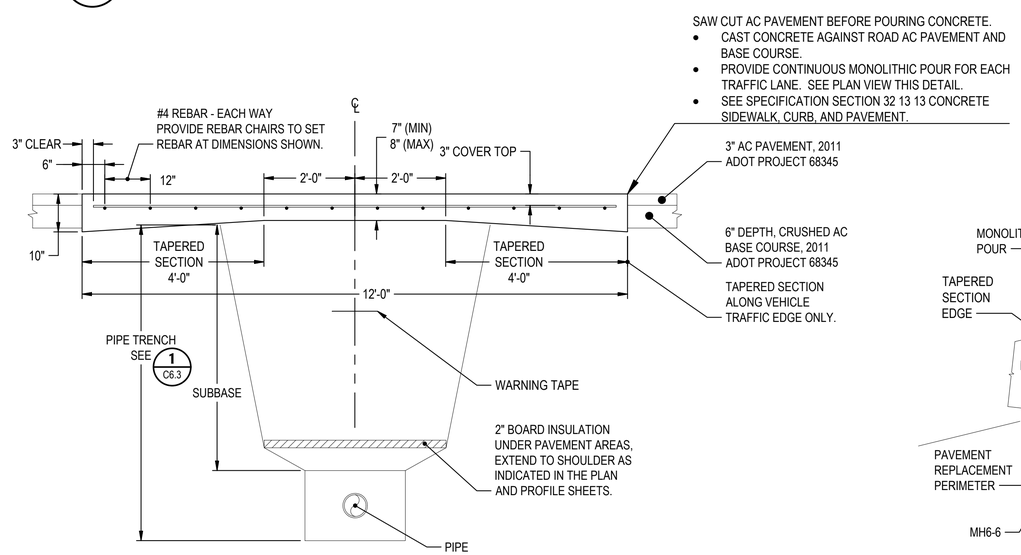

SECTION A-A

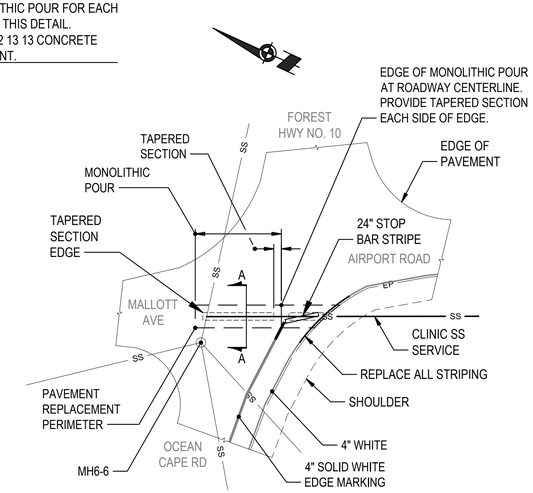

PLAN VIEW - MALLOTT AVE /OCEAN CAPE/AIRPORT ROAD INTERSECTION

4 C6.2 YAKUTAT AIRPORT ROAD / AIRPORT ROAD PAVEMENT REPLACEMENT

SCALE: NTS

Architects Alaska.
ARCHITECTS ALASKA
AK Corp. Authorization AECC561
900 W. 5th Avenue, Suite 403
Anchorage, Alaska 99501
907.272.3567
191 E. Swanson Avenue, Suite 203
Wasilla, Alaska 99654
907.373.7503
www.architectsalaska.com

PDC ENGINEERS
PLAN • DESIGN • CONSTRUCT
6205 Glacier Highway, Juneau, Alaska 99801
907.780.6060 | AECC605

STATE OF ALASKA 49TH
DAVID BRIAN AREHART
CE 8799
5/15/19
REGISTERED PROFESSIONAL ENGINEER

YAKUTAT COMMUNITY HEALTH CENTER
YAKUTAT, ALASKA

Revisions		
No.	Description	Date

Drawn by DA	Date 13 MAY 2019
Checked KB	Job No. 17046.01

Sheet Contents
SEWER DETAILS

Category	Sheet No.
C	6.2

DRAWING FILE: p:\2017\17341\p-sa_yak_com_cnt\cic\6022\fl_17341\n.dwg

PLOT DATE: 6/14/2019 8:33 AM

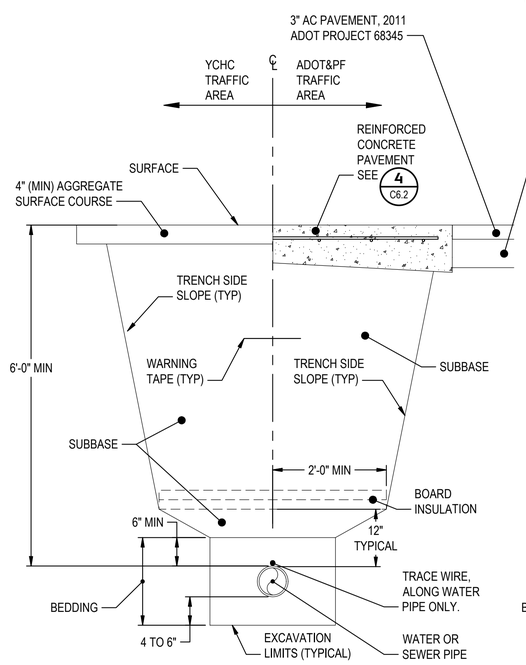

TRAFFIC LOCATIONS

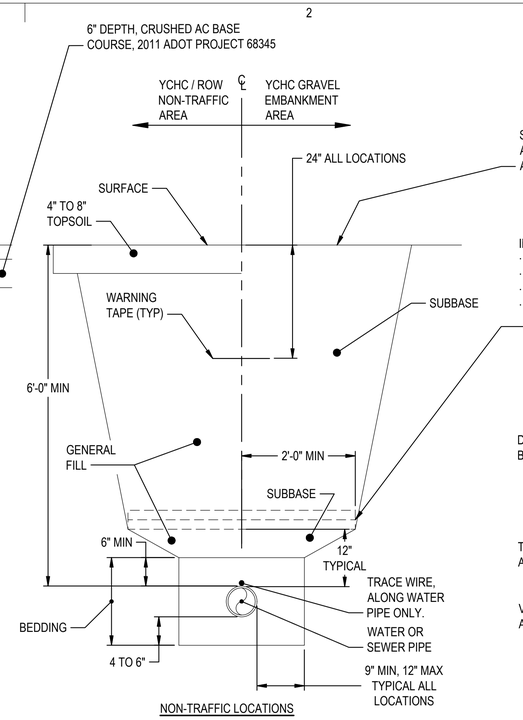

NON-TRAFFIC LOCATIONS

SUBBASE TO FINISHED GRADE BELOW LANDSCAPE AREAS AND CONCRETE PAVEMENT. WITHIN VEHICLE TRAFFIC AREAS AND ALONG SHOULDERS, 4" MIN, BASE COURSE.

INSTALL BOARD INSULATION WHEN SOIL COVER IS LESS THAN 6'-0".
- WATER AND SEWER PIPE.
- TRAFFIC AND NON-TRAFFIC AREAS.
- EXTEND EXCAVATION WIDTH TO INSTALL INSULATION.
- SEE WATER AND SEWER PLAN AND PROFILE FOR INSULATION THICKNESS AND LOCATIONS.

1 C6.3 WATER AND SEWER PIPE TRENCH SECTIONS - TYPICAL

SCALE: NTS

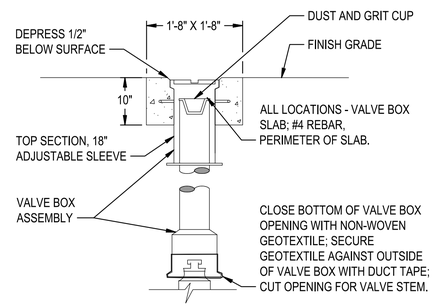

2 C6.3 WATER VALVE BOX- TYPICAL

SCALE: NTS

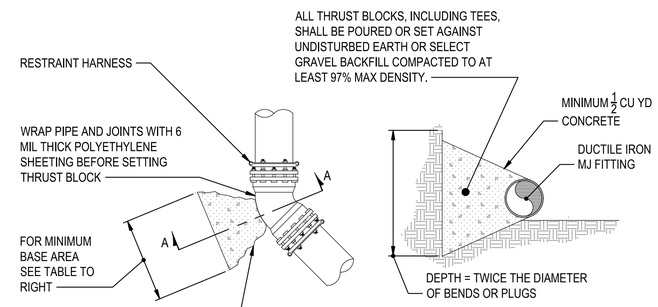

BENDS

SECTION A-A

BEND DEGREES	MINIMUM BEARING AREA, SQ FT					
	D=6"	D=8"	D=10"	D=12"	D=14"	D=16"
22°-30'	1	1.5	2.5	3.5	4.5	6
45°	1	1.5	2.5	3.5	4.5	6
60°	2.0	2.5	4.5	6	8	10.5
90°	2.0	2.5	4.5	6	8	10.5

* FOR BENDS GREATER THAN 5°, BUT LESS THAN 22°30', USE AREA FOR 22°-30°.

3 C6.3 THRUST BLOCK DETAIL AND SIZING CHART

SCALE: NTS

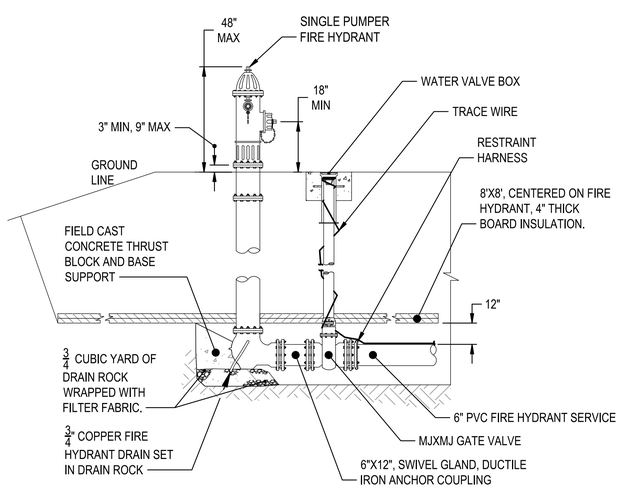

FIRE HYDRANT ELEVATION

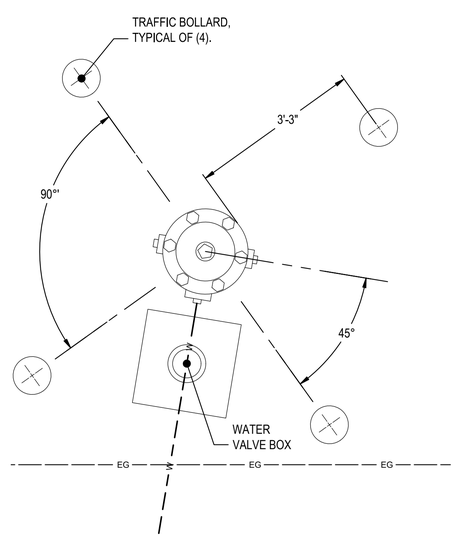

FIRE HYDRANT PLAN VIEW

4 C6.3 FIRE HYDRANT DETAILS

SCALE: NTS

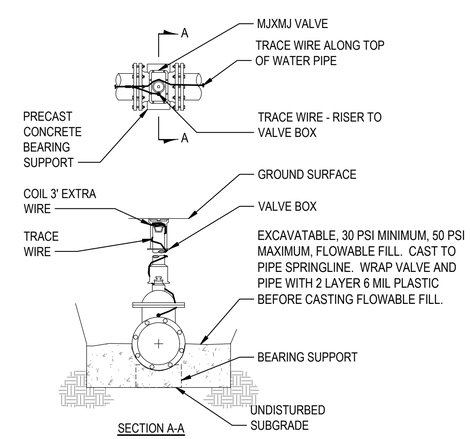

SECTION A-A

5 C6.3 GATE VALVE - TYPICAL

SCALE: NTS

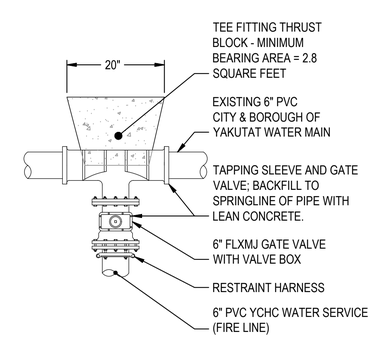

6 C6.3 WATER MAIN TAP - TYPICAL

SCALE: NTS

Architects Alaska.
ARCHITECTS ALASKA
AK Corp. Authorization AECC561
900 W. 5th Avenue, Suite 403
Anchorage, Alaska 99501
907.272.3567
191 E. Swanson Avenue, Suite 203
Wasilla, Alaska 99654
907.373.7503
www.architectsalaska.com

PDC ENGINEERS
PLAN • DESIGN • CONSTRUCT
6205 Glacier Highway, Juneau, Alaska 99801
907.780.6060 | AECC605

STATE OF ALASKA 49TH DAVID BRIAN AREHART CE 8799 5/17/19 REGISTERED PROFESSIONAL ENGINEER

YAKUTAT COMMUNITY HEALTH CENTER
YAKUTAT, ALASKA

Revisions		
No.	Description	Date

Drawn by DA	Date 13 MAY 2019
Checked KB	Job No. 17046.01

Sheet Contents
WATER DETAILS

Category	Sheet No.
C	6.3

DRAWING FILE: p:\2017\17341\ps\a_yak_com_cnt\cic\0603dfl_17341\n.dwg

PLOT DATE: 6/14/2019 8:33 AM

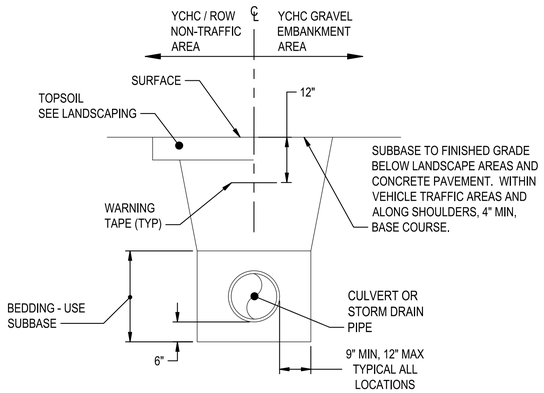

1 / C6.4 STORM DRAIN AND CULVERT TRENCH SECTION - TYPICAL

SCALE: NTS

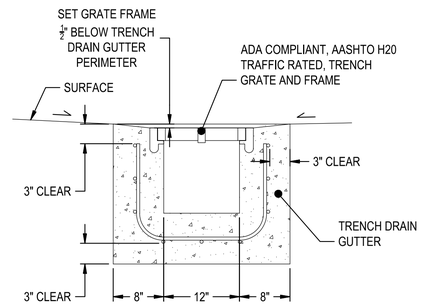

2 / C6.4 EAST STORM DRAIN TRENCH DRAIN

SCALE: NTS

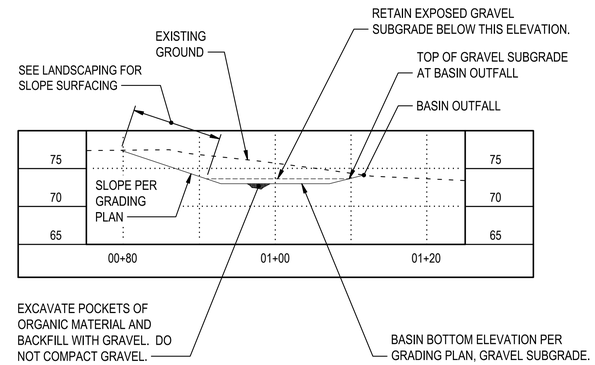

H / C6.4 LOCAL RETENTION AND INFILTRATION BASIN TYPICAL SECTION

SCALE: NTS

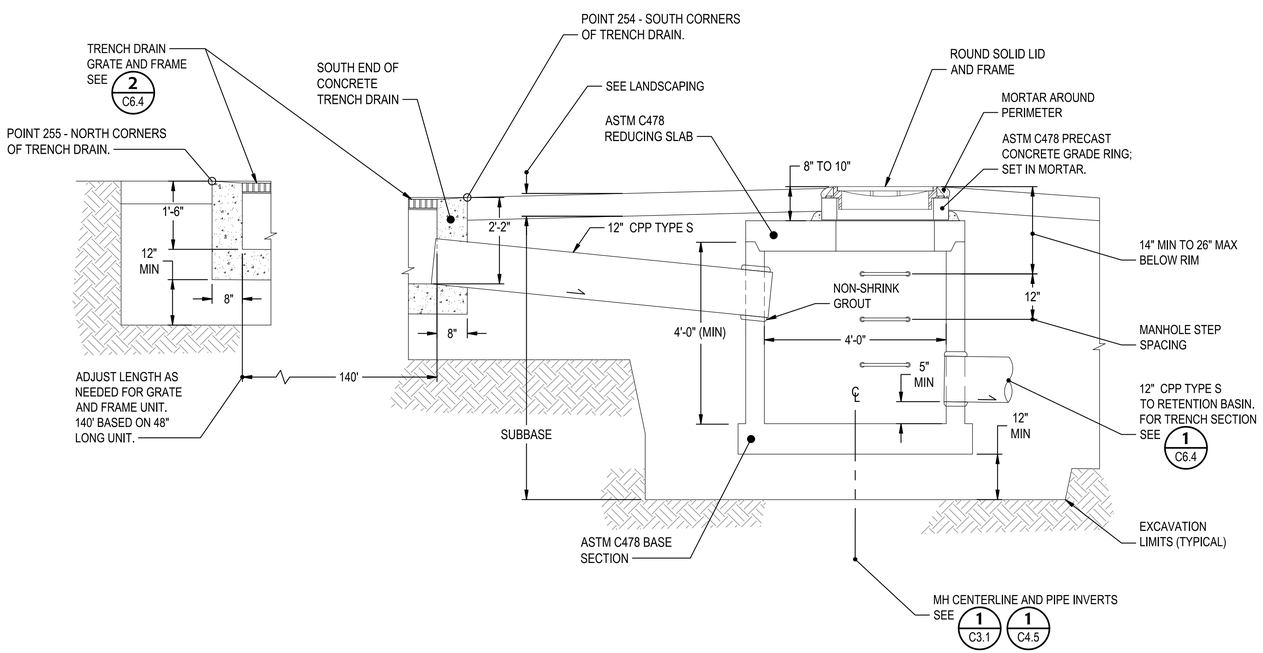

3 / C6.4 TRENCH DRAIN AND STORM DRAIN MANHOLE

SCALE: NTS

ARCHITECTS ALASKA
AK Corp. Authorization AECC561

900 W. 5th Avenue, Suite 403
Anchorage, Alaska 99501
907.272.3567

191 E. Swanson Avenue, Suite 203
Wasilla, Alaska 99654
907.373.7503

www.architectsalaska.com

PDC ENGINEERS
PLAN • DESIGN • CONSTRUCT
6205 Glacier Highway, Juneau, Alaska 99801
907.780.6060 | AECC605

STATE OF ALASKA 49TH DAVID BRIAN AREHART CE 8799 5/14/19 REGISTERED PROFESSIONAL ENGINEER

YAKUTAT COMMUNITY HEALTH CENTER
YAKUTAT, ALASKA

Revisions		
No.	Description	Date

Drawn by DA	Date 13 MAY 2019
Checked KB	Job No. 17046.01

Sheet Contents
STORM DRAIN DETAILS

Category	Sheet No.
C	6.4

DRAWING FILE: p:\2017\17341\p-aa_yak_com_cnt\cic\06040fl_17341jn.dwg

PLOT DATE: 6/14/2019 8:34 AM

WATER SERVICE SHEET C5.1 & C5.2

POINT #	NORTHING	EASTING	ELEVATION	DESCRIPTION
101	2867374.57	1562713.92	--	45 & 22.5 DEG BEND
102	2867327.70	1562661.75	--	45 & 22.5 DEG BEND
103	2867292.28	1562674.25	--	11.25 DEGREE BEND
104	2867269.12	1562687.99	--	90 DEGREE BEND
105	2867233.64	1562628.19	--	90 DEGREE BEND
106	2867160.37	1562671.67	--	11.25 DEGREE BEND
107	2867139.97	1562678.87	--	11.25 DEGREE BEND
108	2866833.91	1562860.49	--	22.5 DEGREE BEND
109	2866746.64	1562873.04	--	11.25 DEGREE BEND
110	2866700.53	1562870.57	--	TEE
111	2866702.19	1562839.63	--	45 & 22.5 DEG BEND
112	2866683.62	1562830.76	--	22.5 DEGREE BEND
113	2866627.30	1562830.15	--	BLDG PENETRATION

FIRE PROTECTION SHEET C5.2

POINT #	NORTHING	EASTING	ELEVATION	DESCRIPTION
151	2866694.44	1562870.95	--	45° & 22.5° BENDS
152	2866681.66	1562896.75	--	45° BEND
153	2866685.02	1562906.27	--	FIRE HYDRANT

SEWER SERVICE SHEET C5.3 & C5.4

POINT #	NORTHING	EASTING	ELEVATION	DESCRIPTION
201	2867392.96	1562528.44	--	POINT OF BEARING
202	2867152.23	1562656.00	--	MH-1C
203	2866820.23	1562853.31	--	MH-2C
204	2866631.99	1562853.31	--	CLEANOUT

SITE FEATURES SHEET C4.5 & C4.6

POINT #	NORTHING	EASTING	ELEVATION	DESCRIPTION
301	--	--	--	NOT USED
302	--	--	--	NOT USED
303	--	--	--	NOT USED
304	--	--	--	NOT USED
305	--	--	--	NOT USED
306	--	--	--	NOT USED
307	--	--	--	NOT USED
308	--	--	--	NOT USED
309	--	--	--	NOT USED
310	2866732.16	1562837.32	--	BOLLARD
311	2866733.02	1562832.39	--	BOLLARD
312	2866730.96	1562827.84	--	BOLLARD
313	2866726.69	1562825.23	--	BOLLARD
314	2866718.06	1562827.35	--	BOLLARD
315	2866701.03	1562818.68	--	BOLLARD
316	2866697.99	1562820.48	--	BOLLARD
317	2866693.42	1562838.40	--	BOLLARD
318	2866670.98	1562832.68	--	BOLLARD
319	2866673.06	1562824.52	--	BOLLARD
320	2866675.15	1562816.35	--	BOLLARD
321	2866667.09	1562816.57	--	BOLLARD
322	2866659.19	1562817.80	--	BOLLARD
323	2866653.01	1562815.81	--	BOLLARD

SITE FEATURES SHEET C4.5 & C4.6

POINT #	NORTHING	EASTING	ELEVATION	DESCRIPTION
324	2866666.36	1562855.77	--	BOLLARD
325	2866673.95	1562870.49	--	BOLLARD
326	2866664.43	1562875.97	--	BOLLARD
327	2866660.15	1562873.12	--	BOLLARD
328	2866652.98	1562874.81	--	BOLLARD
329	--	--	--	NOT USED
330	--	--	--	NOT USED
331	--	--	--	NOT USED
332	--	--	--	NOT USED
333	2866627.00	1562810.64	--	BOLLARD
334	2866630.94	1562811.96	--	BOLLARD
335	2866632.51	1562815.81	--	BOLLARD
336	2866632.51	1562826.81	--	BOLLARD
337	2866632.50	1562839.80	--	BOLLARD
338	2866632.50	1562850.80	--	BOLLARD
339	2866632.47	1562874.81	--	BOLLARD
340	2866632.47	1562892.47	--	BOLLARD
341	2866628.14	1562894.98	--	BOLLARD
342	2866549.49	1562803.82	--	BOLLARD
343	2866511.05	1562803.82	--	BOLLARD
344	2866544.76	1562894.34	--	BOLLARD
345	2866468.50	1562803.82	--	BOLLARD
346	2866468.50	1562828.82	--	BOLLARD
347	2866468.50	1562873.50	--	BOLLARD
348	2866468.50	1562893.83	--	BOLLARD
349	2866445.00	1562873.50	--	BOLLARD
350	2866444.48	1562893.83	--	BOLLARD
351	2866442.43	1562898.78	--	BOLLARD
352	2866437.48	1562900.83	--	BOLLARD
353	2866429.50	1562901.33	--	BOLLARD
354	2866429.50	1562856.50	--	BOLLARD
355	2866429.50	1562847.16	--	BOLLARD
356	2866429.48	1562817.33	--	BOLLARD
357	2866437.48	1562813.02	--	BOLLARD
358	2866442.43	1562815.07	--	BOLLARD
359	2866444.48	1562820.02	--	BOLLARD
360	2866445.00	1562828.82	--	BOLLARD
361	2866370.50	1562854.80	--	BOLLARD
362	2866370.50	1562901.83	--	BOLLARD
363	2866362.50	1562901.83	--	BOLLARD
364	2866362.50	1562854.80	--	BOLLARD
365	2866362.50	1562848.83	--	BOLLARD
366	2866362.50	1562819.83	--	BOLLARD
367	2866370.50	1562819.83	--	BOLLARD
368	2866370.50	1562848.80	--	BOLLARD
369	2866312.50	1562949.33	--	BOLLARD
370	2866312.50	1562932.33	--	BOLLARD
371	2866304.00	1562932.33	--	BOLLARD
372	2866304.00	1562810.35	--	BOLLARD
373	2866312.50	1562810.35	--	BOLLARD
374	2866312.50	1562793.35	--	BOLLARD
375	2866781.18	1562859.04	--	LIGHT POLE

SITE FEATURES SHEET C4.5 & C4.6

POINT #	NORTHING	EASTING	ELEVATION	DESCRIPTION
376	2866671.85	1562783.48	--	LIGHT POLE
377	2866402.96	1562783.90	--	LIGHT POLE
378	2866288.78	1562857.73	--	LIGHT POLE
379	2866350.91	1562956.17	--	LIGHT POLE
380	2866441.65	1562956.53	--	LIGHT POLE
381	2866702.95	1562894.58	--	LIGHT POLE
382	2866430.67	1562830.83	--	SIGN - SEE C3.1
383	2866430.67	1562837.83	--	SIGN - SEE C3.1
384	2866430.67	1562844.83	--	SIGN - SEE C3.1
385	2866430.67	1562847.16	--	SIGN - SEE C3.1
386	2866430.67	1562856.50	--	SIGN - SEE C3.1
387	2866430.67	1562859.83	--	SIGN - SEE C3.1
388	2866415.58	1562938.33	--	SIGN - SEE C3.1
389	2866488.63	1562922.19	--	SIGN - SEE C3.1
390	2866639.48	1562926.34	--	SIGN - SEE C3.1
391	2866667.75	1562913.76	--	SIGN - SEE C3.1
392	2866711.43	1562889.76	--	SIGN - SEE C3.1
393	2866272.67	1562807.61	--	SIGN - SEE C3.1
394	2866226.52	1562845.84	--	SIGN - SEE C3.1
395	2866180.36	1562884.08	--	SIGN - SEE C3.1
396	2866210.72	1562936.57	--	SIGN - SEE C3.1
397	2866241.65	1562939.53	--	SIGN - SEE C3.1
398	2866272.59	1562942.48	--	SIGN - SEE C3.1

STORM SEWER C4.5 & C4.6

POINT #	NORTHING	EASTING	ELEVATION	DESCRIPTION
251	2866473.21	1562896.84	79.88	SDMH RIM
253	2866287.16	1562942.85	74.20	12"CMP IE

STORM DRAIN C3.1

POINT #	NORTHING	EASTING	ELEVATION	DESCRIPTION
254	2866481.07	1562896.43	79.47	TRENCH DRAIN
255	2866622.41	1562896.43	80.00	TRENCH DRAIN

GRADING POINTS SHEET C4.1 & C4.2

POINT #	NORTHING	EASTING	ELEVATION	DESCRIPTION
401	2866735.78	1562874.10	80.20	EG
402	2866686.76	1562901.00	80.37	EG PAD
403	2866679.71	1562904.91	80.40	EG PAD
404	2866690.45	1562907.85	80.14	EG PAD
405	2866683.44	1562911.71	80.14	EG PAD
406	2866648.63	1562921.99	80.51	EG
407	2866639.48	1562924.34	80.51	EG
408	2866627.21	1562924.34	79.63	EG
409	2866627.21	1562917.29	79.63	EG
410	2866622.21	1562912.29	79.63	EG
411	2866503.00	1562912.29	79.60	EG
412	2866503.00	1562920.29	80.40	EG
413	2866487.99	1562920.29	79.95	EG
414	2866469.99	1562935.33	78.76	EG
415	2866421.99	1562937.29	78.44	EG
416	2866410.16	1562937.33	78.36	EG
417	2866402.16	1562945.36	78.28	EG
418	2866402.16	1562955.29	78.22	EG
419	2866400.16	1562955.29	78.24	SH
420	2866311.86	1562955.28	77.07	SH
421	2866309.77	1562953.28	77.05	EG
422	2866291.00	1562935.33	76.62	EG
423	2866291.01	1562905.32	76.48	EG
424	2866291.00	1562851.86	76.24	EG
425	2866291.00	1562812.83	76.06	EG
426	2866309.91	1562789.33	76.28	EG
427	2866311.52	1562787.33	76.20	SH
428	2866375.31	1562787.33	77.43	SH
429	2866393.75	1562787.33	77.98	SH
430	2866424.14	1562778.82	78.44	SH
431	2866467.50	1562778.82	78.96	SH
432	2866469.50	1562780.82	78.96	SH
433	2866469.50	1562786.31	79.00	EG/SH
434	2866617.21	1562786.31	78.87	EG/SH
435	2866627.21	1562784.31	78.80	EG/SH
436	2866681.60	1562784.31	78.75	EG/SH
437	2866737.48	1562798.57	79.08	EG/SH
438	2866736.79	1562786.35	78.96	EG
439	2866757.76	1562785.16	78.96	EG
440	2866765.92	1562800.02	79.30	EG
441	2866776.84	1562794.02	79.54	EG
442	2866796.23	1562829.29	80.53	EG
443	2866774.91	1562841.01	80.41	EG/SH
444	2866773.37	1562846.42	80.58	SH
445	2866467.99	1562935.30	78.82	EG
446	2866455.99	1562935.33	78.73	FG
447	2866423.99	1562935.33	78.50	EG
448	2866421.99	1562935.29	78.55	EG
449	2866410.16	1562935.33	78.43	EG
450	2866400.16	1562945.34	78.34	EG
451	2866400.16	1562953.29	78.30	EG
452	2866420.62	1562961.22	70.00	FG

SHEET NOTES

1. BASIS OF HORIZONTAL AND VERTICAL CONTROL IS GIVEN ON SHEET C1.2.

Architects Alaska.

ARCHITECTS ALASKA
AK Corp. Authorization AECC561

900 W. 5th Avenue, Suite 403
Anchorage, Alaska 99501
907.272.3567

191 E. Swanson Avenue, Suite 203
Wasilla, Alaska 99654
907.373.7503

www.architectsalaska.com

PDC ENGINEERS
PLAN • DESIGN • CONSTRUCT
6205 Glacier Highway, Juneau, Alaska 99801
907.780.6060 | AECC605

STATE OF ALASKA 49TH
DAVID BRIAN AREHART
CE 8799
5/15/19
REGISTERED PROFESSIONAL ENGINEER

YAKUTAT COMMUNITY HEALTH CENTER
YAKUTAT, ALASKA

Revisions		
No.	Description	Date

Drawn by DS	Date 13 MAY 2019
Checked DA, KB	Job No. 17046.01

Sheet Contents
POINT TABLES - 1 OF 3

Category	Sheet No.
C	7.1

DRAWING FILE: p:\2017\17341\jnsa_yak_com_cntr\c\c3402grad_17341jn.dwg
PLOT DATE: 6/14/2019 8:34 AM

GRADING POINTS SHEET C4.1 & C4.2

POINT #	NORTHING	EASTING	ELEVATION	DESCRIPTION
453	2866427.49	1562961.84	70.00	FG
454	2866421.88	1562973.31	70.50	FG
455	2866420.37	1562974.21	70.50	FG
456	2866399.41	1562975.56	70.00	FG
457	2866366.73	1562981.79	70.00	FG
458	2866362.81	1562978.29	70.00	FG
459	2866396.51	1562974.75	70.00	FG
460	2866407.35	1562973.55	70.76	FG
461	2866411.19	1562973.09	70.50	FG
462	2866423.61	1562961.71	69.01	FG
463	2866424.48	1562961.98	69.00	FG
464	2866424.47	1562963.32	69.00	FG
465	2866419.93	1562968.36	70.50	FG
466	2866467.99	1562919.30	78.50	GRADE BREAK
467	2866423.99	1562919.29	78.29	GRADE BREAK
468	2866421.98	1562905.32	78.25	GRADE BREAK
469	2866467.50	1562900.29	79.60	GRADE BREAK/EG
470	2866445.58	1562873.47	79.60	GRADE BREAK/EG
471	2866445.64	1562825.79	79.60	GRADE BREAK/EG
472	2866467.50	1562798.34	79.60	GRADE BREAK/EG
473	2866425.49	1562851.83	78.98	GRADE BREAK
474	2866400.00	1562851.83	78.47	GRADE BREAK
475	2866354.53	1562851.84	77.17	GRADE BREAK
476	2866429.78	1562817.83	78.68	GRADE BREAK/EG
477	2866358.50	1562817.83	77.13	GRADE BREAK
478	2866476.34	1562868.30	80.46	FG
479	2866467.50	1562868.30	80.28	TOC/EG
480	2866446.50	1562868.30	79.84	TOC/EG
481	2866445.48	1562893.83	79.27	FG
482	2866429.48	1562893.83	78.50	FG
483	2866429.48	1562854.83	79.06	FG
484	2866445.33	1562854.83	79.84	FG
485	2866445.33	1562848.83	79.84	FG
486	2866429.48	1562848.83	79.06	FG
487	2866429.48	1562820.02	78.71	FG
488	2866445.48	1562820.02	79.43	FG
489	2866446.50	1562833.30	79.84	TOC/EG
490	2866467.50	1562833.30	80.28	TOC/EG
491	2866476.34	1562833.30	80.46	FG
492	2866358.90	1562789.33	77.00	FG
493	2866394.03	1562789.33	78.04	EG
494	2866424.36	1562780.83	78.50	EG
495	2866467.50	1562780.83	79.02	EG
500	2866338.75	1562979.74	72.07	FG
501	2866320.52	1562967.58	73.09	FG
502	2866293.59	1562970.79	77.01	FG
503	2866278.00	1562940.99	74.00	FG
504	2866282.45	1562950.34	76.21	CUT LIMITS
505	2866277.16	1562947.49	75.84	CUT LIMITS
506	2866262.82	1562946.75	75.80	CUT LIMITS
507	2866244.41	1562948.70	76.72	CUT LIMITS
508	2866215.73	1562944.93	76.46	CUT LIMITS

1

GRADING POINTS SHEET C4.1 & C4.2

POINT #	NORTHING	EASTING	ELEVATION	DESCRIPTION
509	2866194.78	1562944.51	76.85	CUT LIMITS
510	2866175.19	1562935.25	75.01	CUT LIMITS
511	2866166.34	1562941.99	74.99	CUT LIMITS
512	2866142.25	1562932.83	75.00	CUT LIMITS
513	2866156.77	1562901.02	74.85	CUT LIMITS
514	2866278.00	1562936.59	74.00	FG BASIN
515	2866273.62	1562940.57	74.00	FG BASIN
516	2866173.97	1562931.06	74.00	FG BASIN
517	2866159.57	1562942.26	74.00	FG BASIN
518	2866145.91	1562934.43	74.00	FG BASIN
519	2866159.04	1562904.34	74.00	FG BASIN
520	2866249.79	1562823.97	75.00	FG BASIN
521	2866271.44	1562811.22	74.00	FG BASIN
522	2866278.00	1562814.15	74.00	FG BASIN
523	2866235.44	1562872.21	68.00	BOTT BASIN
524	2866242.00	1562875.29	68.00	BOTT BASIN
525	2866242.00	1562909.04	68.00	BOTT BASIN
526	2866237.62	1562913.02	68.00	BOTT BASIN
527	2866216.96	1562911.05	68.00	BOTT BASIN
528	2866213.87	1562909.07	68.00	BOTT BASIN
529	2866208.14	1562899.15	68.00	BOTT BASIN
530	2866209.05	1562894.07	68.00	BOTT BASIN
531	2866205.15	1562917.96	70.00	FG
532	2866193.02	1562896.97	70.00	FG
533	2866203.68	1562927.41	70.00	GABBION BOTT
534	2866182.66	1562891.05	70.00	GABBION BOTT
535	2866169.72	1562918.60	71.00	FG BASIN
536	2866167.29	1562913.09	71.00	FG BASIN
537	2866158.89	1562932.65	72.00	FG BASIN
538	2866156.11	1562931.05	72.00	FG BASIN
539	2866159.11	1562946.32	74.50	FG WEIR
540	2866157.80	1562947.87	74.50	FG WEIR
541	2866155.50	1562944.25	74.08	FG WEIR
542	2866154.18	1562945.80	74.08	FG WEIR
543	2866146.10	1562938.86	74.08	FG WEIR
544	2866145.28	1562940.69	74.08	FG WEIR
545	2866142.48	1562936.78	74.50	FG WEIR
546	2866141.66	1562938.62	74.50	FG WEIR
547	2866141.05	1562942.59	74.00	FG WEIR
548	2866153.15	1562949.53	74.00	FG WEIR
549	2866155.66	1562954.43	73.58	DITCH BOTT
550	2866149.69	1562951.01	73.50	DITCH BOTT
551	2866141.16	1562946.11	73.39	DITCH BOTT
552	2866112.21	1562965.19	73.00	DITCH BOTT
553	2866089.28	1562981.34	72.19	DITCH BOTT
554	2866088.82	1562984.74	72.00	DITCH BOTT
555	2866088.15	1562989.74	71.00	DITCH BOTT
556	2866085.93	1563006.33	62.90	DITCH BOTT
557	2866085.25	1563011.42	63.36	DITCH BOTT
558	2866084.70	1563008.02	63.03	DITCH WALL
559	2866081.09	1563012.96	63.12	DITCH WALL
560	2866157.03	1562960.32	75.40	FG MOUND

2

GRADING POINTS SHEET C4.1 & C4.2

POINT #	NORTHING	EASTING	ELEVATION	DESCRIPTION
561	2866147.93	1562955.18	75.40	FG MOUND
562	2866135.03	1562955.82	75.40	FG MOUND
563	2866114.90	1562969.40	75.40	FG MOUND
564	2866150.10	1562965.63	75.00	FG
565	2866136.19	1562957.45	75.00	FG
566	2866115.52	1562971.22	74.99	FG
567	2866144.73	1562962.94	74.21	FG
568	2866138.21	1562960.30	74.56	FG
569	2866131.46	1562962.40	74.82	FG
570	2866118.04	1562974.07	74.55	FG
571	2866117.17	1562974.63	74.54	FG
572	2866111.04	1562970.30	74.75	FG
573	2866241.32	1562967.72	76.66	FG
574	2866281.36	1562808.60	74.03	BEGIN DITCH
575	2866301.44	1562784.75	74.19	DITCH BOTT
576	2866310.93	1562779.57	74.24	DITCH BOTT
577	2866391.83	1562779.57	75.00	DITCH BOTT
578	2866421.64	1562769.54	75.16	DITCH BOTT
579	2866467.68	1562767.90	75.39	DITCH BOTT
580	2866485.40	1562775.37	75.48	DITCH BOTT
581	2866526.26	1562780.31	76.94	DITCH BOTT
582	2866544.94	1562780.53	76.88	DITCH BOTT
583	2866569.73	1562780.14	77.00	DITCH BOTT
584	2866616.75	1562783.34	78.07	DITCH BOTT
585	2866626.91	1562781.31	78.00	DITCH BOTT
586	2866681.98	1562781.31	77.95	DITCH BOTT
587	2866730.27	1562793.63	78.06	DITCH BOTT
588	2866734.02	1562790.84	78.08	DITCH BOTT
589	2866733.63	1562783.53	78.10	DITCH BOTT
590	2866759.09	1562782.08	78.16	DITCH BOTT
591	2866778.34	1562790.52	78.57	DITCH BOTT
592	2866800.30	1562830.48	79.53	DITCH BOTT
593	2866776.40	1562843.62	79.62	END DITCH
594	2866269.33	1562807.78	76.45	CUT LIMITS
595	2866272.13	1562806.70	76.46	CUT LIMITS
596	2866276.00	1562804.01	76.45	CUT LIMITS
597	2866289.43	1562788.90	76.34	CUT LIMITS
598	2866299.98	1562777.13	76.40	CUT LIMITS
599	2866310.96	1562772.89	76.51	CUT LIMITS
600	2866345.06	1562772.55	76.97	CUT LIMITS
601	2866384.01	1562771.11	77.91	CUT LIMITS
602	2866391.25	1562776.07	76.00	FG MOUND
603	2866421.01	1562766.11	76.16	FG MOUND
604	2866468.31	1562764.49	76.39	FG MOUND
605	2866486.31	1562771.95	76.48	FG MOUND
606	2866526.73	1562776.84	77.94	FG MOUND
607	2866396.45	1562764.61	75.00	FILL LIMITS
608	2866401.82	1562751.39	75.00	FILL LIMITS
609	2866416.75	1562750.40	75.00	FILL LIMITS
610	2866467.85	1562748.33	75.00	FILL LIMITS
611	2866522.06	1562746.22	75.00	FILL LIMITS
612	2866522.53	1562746.82	75.00	FILL LIMITS

3

GRADING POINTS SHEET C4.1 & C4.2

POINT #	NORTHING	EASTING	ELEVATION	DESCRIPTION
613	2866514.72	1562769.12	75.00	FILL LIMITS
614	2866411.02	1562758.84	75.01	GRADE BREAK
615	2866506.86	1562758.26	75.01	GRADE BREAK
616	2866534.04	1562774.85	78.20	CUT LIMITS
617	2866616.76	1562781.19	78.64	FG MOUND
618	2866626.56	1562777.83	79.00	FG MOUND
619	2866682.41	1562777.85	78.95	FG MOUND
620	2866730.49	1562790.08	79.06	FG MOUND
621	2866730.08	1562782.72	79.10	FG MOUND
622	2866732.43	1562780.09	79.10	FG MOUND
623	2866759.70	1562778.68	79.16	FG MOUND
624	2866780.06	1562787.46	79.57	FG MOUND
625	2866781.25	1562788.54	79.57	FG MOUND
626	2866803.54	1562829.84	80.39	FG MOUND
627	2866792.02	1562837.54	79.80	FG
628	2866792.01	1562844.64	79.80	FG
629	2866791.55	1562851.42	79.80	FG
630	2866790.97	1562856.52	79.80	FG
631	2866789.98	1562860.51	79.80	FG
632	2866792.13	1562860.45	80.00	FG
633	2866794.87	1562866.77	80.00	FG
634	2866803.13	1562869.74	80.00	FG
635	2866804.10	1562869.24	80.00	FG
636	2866795.71	1562871.90	79.80	FG
637	2866793.64	1562874.07	79.80	FG
638	2866790.75	1562827.64	80.90	CONC PAD
639	2866770.62	1562827.68	80.90	CONC PAD
640	2866779.20	1562806.61	80.28	CONC PAD
641	2866761.82	1562806.84	80.28	CONC PAD
642	2866756.47	1562797.76	79.19	CONC PAD
643	2866738.90	1562788.23	78.98	CONC PAD
644	2866750.50	1562844.25	79.93	GRADE BREAK
645	2866683.21	1562881.24	79.93	GRADE BREAK
646	2866627.30	1562900.29	80.00	FG
647	2866633.99	1562891.39	80.38	FG
648	2866633.99	1562870.81	80.38	TOC/EG
649	2866651.48	1562870.81	80.00	TOC/EG
650	2866662.28	1562877.81	79.77	FG/EG
651	2866666.42	1562877.98	79.76	FG/EG
652	2866674.43	1562873.58	79.74	FG/EG
653	2866676.01	1562868.15	79.73	FG/EG
654	2866668.55	1562854.56	79.50	FG/EG
655	2866715.87	1562828.55	79.50	FG/EG
656	2866723.34	1562842.14	79.73	FG/EG
657	2866728.77	1562843.72	79.67	FG/EG
658	2866729.88	1562843.10	79.66	FG/EG
659	2866727.31	1562822.81	79.53	FG/EG
660	2866701.65	1562816.26	79.40	FG/EG
661	2866695.57	1562819.87	79.52	FG/EG
662	2866691.49	1562835.85	79.85	FG/EG
663	2866674.05	1562831.40	79.85	FG/EG
664	2866677.63	1562817.36	79.71	FG/EG

4

SHEET NOTES

1. BASIS OF HORIZONTAL AND VERTICAL CONTROL IS GIVEN ON SHEET C1.2.

Architects Alaska.

ARCHITECTS ALASKA
AK Corp. Authorization AECC561

900 W. 5th Avenue, Suite 403
Anchorage, Alaska 99501
907.272.3567

191 E. Swanson Avenue, Suite 203
Wasilla, Alaska 99654
907.373.7503

www.architectsalaska.com

PDC ENGINEERS
PLAN • DESIGN • CONSTRUCT
6205 Glacier Highway, Juneau, Alaska 99801
907.780.6060 | AECC605

STATE OF ALASKA 49TH
DAVID BRIAN AREHART
CE 8799
5/15/19
REGISTERED PROFESSIONAL ENGINEER

YAKUTAT COMMUNITY HEALTH CENTER
YAKUTAT, ALASKA

Revisions

No.	Description	Date
1	ADA GRADING	14JUN2019

Drawn by	Date
DS	13 MAY 2019
Checked	Job No.
DA, KB	17046.01

Sheet Contents
POINT TABLES - 2 OF 3

Category	Sheet No.
C	7.2

DRAWING FILE: p:\2017\17341\jnsa_yak_com_cntr\c\c0402grad_17341jn.dwg
PLOT DATE: 6/14/2019 8:34 AM

GRADING POINTS SHEET C4.1 & C4.2

POINT #	NORTHING	EASTING	ELEVATION	DESCRIPTION
665	2866675.47	1562813.71	79.71	FG/EG
666	2866670.65	1562813.48	79.76	FG/EG
667	2866652.67	1562816.29	79.94	FG/EG
668	2866651.48	1562819.80	80.00	TOC/EG
669	2866627.65	1562819.80	80.50	TOC/EG
670	2866704.93	1562795.82	79.00	GRADE BREAK
671	2866633.78	1562788.43	79.00	GRADE BREAK
672	2866627.40	1562798.34	79.60	GRADE BREAK/EG
673	--	--	--	NOT USED
674	2866739.99	1562895.43	78.00	SWALE
675	2866738.10	1562891.91	78.00	SWALE
676	2866662.48	1562935.86	76.81	SWALE
677	2866660.55	1562932.36	76.79	SWALE
678	2866630.09	1562944.99	76.40	SWALE
679	2866629.88	1562940.99	76.41	SWALE
680	2866616.62	1562943.57	76.21	SWALE
681	2866618.49	1562940.03	76.22	SWALE
682	2866602.33	1562935.77	76.00	SWALE
683	2866602.53	1562931.78	76.00	SWALE
684	2866746.34	1562904.01	158.70	GRADE BREAK
685	2866721.07	1562920.89	158.28	GRADE BREAK
686	2866687.37	1562939.46	158.28	GRADE BREAK
687	2866657.16	1562953.20	158.28	GRADE BREAK
688	2866584.42	1562935.29	73.00	RET BASIN
689	2866569.04	1562945.65	73.00	RET BASIN
690	2866564.43	1562946.04	73.00	RET BASIN
691	2866562.45	1562944.95	73.00	RET BASIN
692	2866560.46	1562942.44	73.00	RET BASIN
693	2866558.32	1562934.29	73.00	RET BASIN
694	2866579.03	1562934.12	73.00	RET BASIN
695	2866599.84	1562939.27	76.00	RET BASIN
696	2866576.02	1562955.42	76.00	RET BASIN
697	2866559.59	1562957.03	0.00	RET BASIN
698	2866556.65	1562955.45	76.00	RET BASIN
699	2866549.12	1562946.31	0.00	RET BASIN
700	2866546.61	1562937.61	76.00	RET BASIN
701	2866558.32	1562922.12	76.00	RET BASIN
702	2866580.32	1562922.12	76.00	RET BASIN
703	2866596.13	1562925.56	76.00	RET BASIN
704	2866505.87	1562950.30	72.50	RET BASIN
705	2866494.79	1562939.73	72.50	RET BASIN
706	2866490.19	1562952.83	72.50	RET BASIN
707	2866494.20	1562958.17	72.50	RET BASIN
708	2866630.87	1562925.34	80.09	EG PAD
709	2866630.87	1562932.01	79.93	EG PAD
710	2866623.37	1562932.01	79.93	EG PAD
711	2866623.37	1562925.34	79.95	EG PAD
712	2866652.66	1562871.40	80.00	FG

GRADING POINTS SHEET C4.1 & C4.2

POINT #	NORTHING	EASTING	ELEVATION	DESCRIPTION
900	2866410.00	1562817.83	78.54	ADA GRADING
901	2866410.00	1562834.83	78.61	ADA GRADING
902	2866410.00	1562851.83	78.67	ADA GRADING
903	2866399.99	1562817.83	78.35	ADA GRADING
904	2866399.99	1562834.83	78.41	ADA GRADING
905	2866400.00	1562865.33	78.43	ADA GRADING
906	2866400.00	1562905.32	77.95	ADA GRADING

1

SHEET NOTES

1. BASIS OF HORIZONTAL AND VERTICAL CONTROL IS GIVEN ON SHEET C1.2.

Architects Alaska.

ARCHITECTS ALASKA
AK Corp. Authorization AECC561

900 W. 5th Avenue, Suite 403
Anchorage, Alaska 99501
907.272.3567

191 E. Swanson Avenue, Suite 203
Wasilla, Alaska 99654
907.373.7503

www.architectsalaska.com

PDC ENGINEERS
PLAN • DESIGN • CONSTRUCT
6205 Glacier Highway, Juneau, Alaska 99801
907.780.6060 | AECC605

STATE OF ALASKA 49TH
DAVID BRIAN AREHART
CE 8799
5/14/19
REGISTERED PROFESSIONAL ENGINEER

YAKUTAT COMMUNITY HEALTH CENTER
YAKUTAT, ALASKA

Revisions

No.	Description	Date
1	ADA GRADING	14JUN2019

Drawn by	Date
DS	13 MAY 2019
Checked	Job No.
DA, KB	17046.01

Sheet Contents
POINT TABLES - 3 OF 3

Category	Sheet No.
C	7.3

DRAWING FILE: p:\2017\17341\n-sa_yak_com_cntr\c\c0402grad_17341n.dwg
PLOT DATE: 6/14/2019 8:34 AM

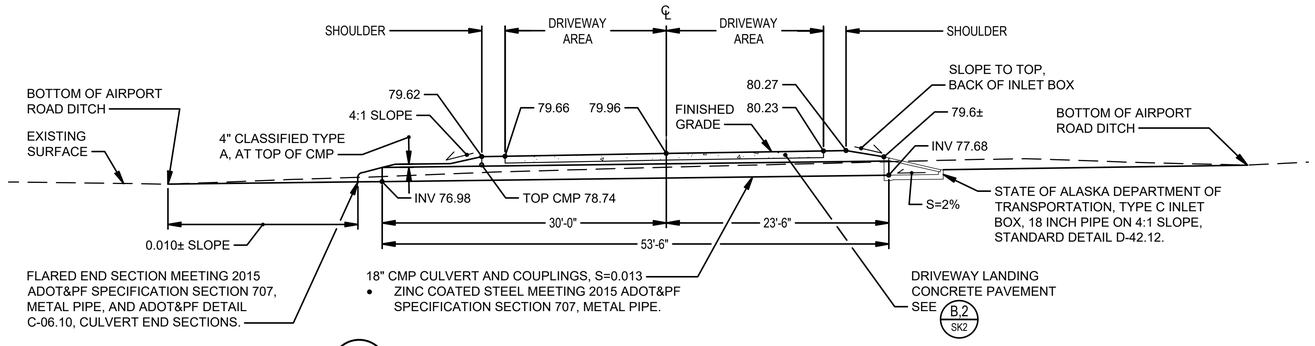

A SK1 — **CMP PROFILE (LOOKING WEST)**
SCALE: 1"=8' PLOTTED ON 22X34 SHEET

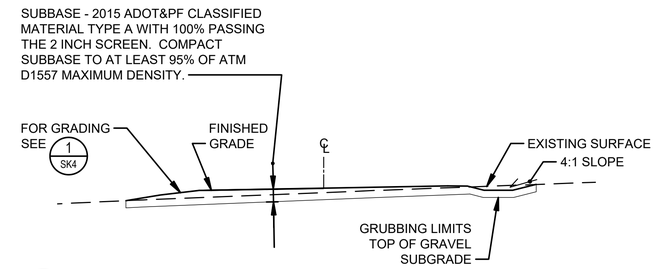

B SK1 — **DRIVEWAY (LOOKING WEST)**
SCALE: 1"=8' PLOTTED ON 22X34 SHEET

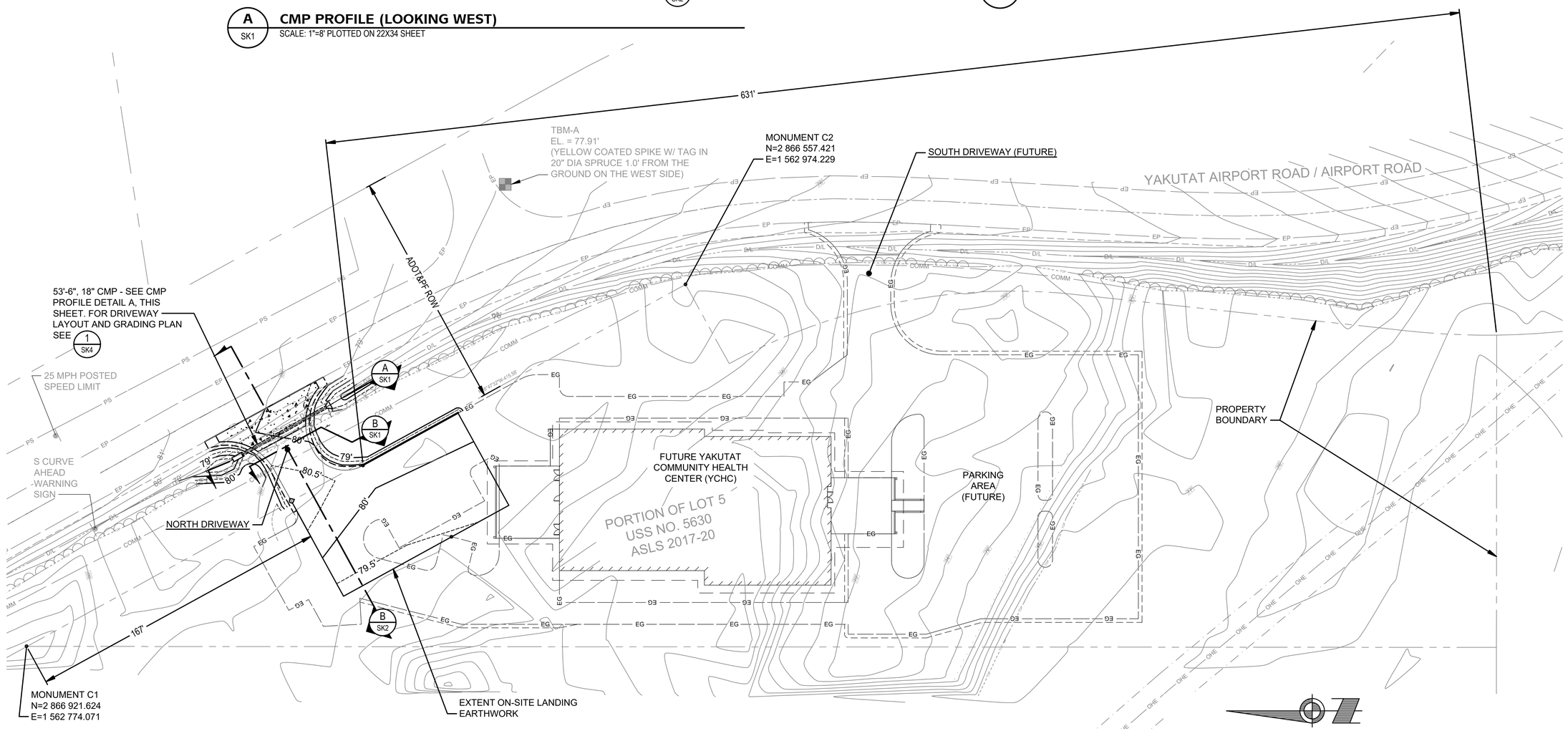

1 SK1 — **YCHC SITE PLAN - ADOT NORTH DRIVEWAY PERMIT**
SCALE: 1"= 30' ON 22X34 PLOTTED SHEET

30 15 0 30 60 90 SCALE IN FEET

8 4 0 8 16 24 SCALE IN FEET

ADOT&PF REVIEWED

Architects Alaska.
ARCHITECTS ALASKA
AK Corp. Authorization AECC561
900 W. 5th Avenue, Suite 403
Anchorage, Alaska 99501
907.272.3567
191 E. Swanson Avenue, Suite 203
Wasilla, Alaska 99654
907.373.7503
www.architectsalaska.com

PDC ENGINEERS
PLAN • DESIGN • CONSTRUCT
2700 Gambell St., Anchorage, AK 99503
907.743.3200 | AECC605

STATE OF ALASKA 49TH
DAVID BRIAN AREHART
CE 8799
REGISTERED PROFESSIONAL ENGINEER

YAKUTAT COMMUNITY HEALTH CENTER
YAKUTAT, ALASKA

Revisions		
No.	Description	Date

Drawn by DBA	Date AUGUST 2018
Checked HCB, DBA	Job No. 17046.01

Sheet Contents
SITE PLAN AND SECTIONS
NORTH DRIVEWAY PERMITTING
PERMIT NO. 28609

Category	Sheet No.
C	SK1

DRAWING FILE: p:\2017\17341n-oa_yak_com_cntr\s\dot permit-north entrance_1 of 4.dwg
PLOT DATE: 5/12/2019 4:36 PM

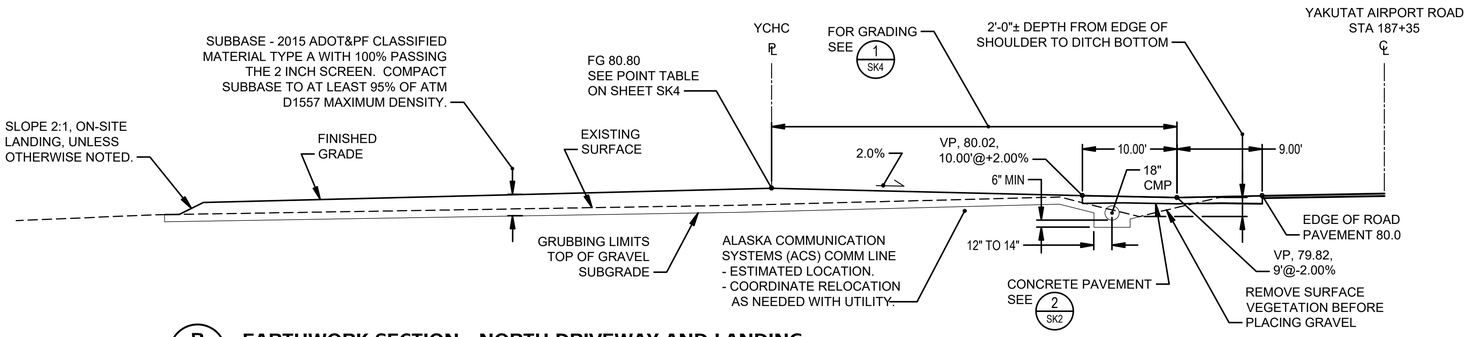

B / SK2 EARTHWORK SECTION - NORTH DRIVEWAY AND LANDING
SCALE: 1"=8' ON 22X34 PLOTTED SHEET

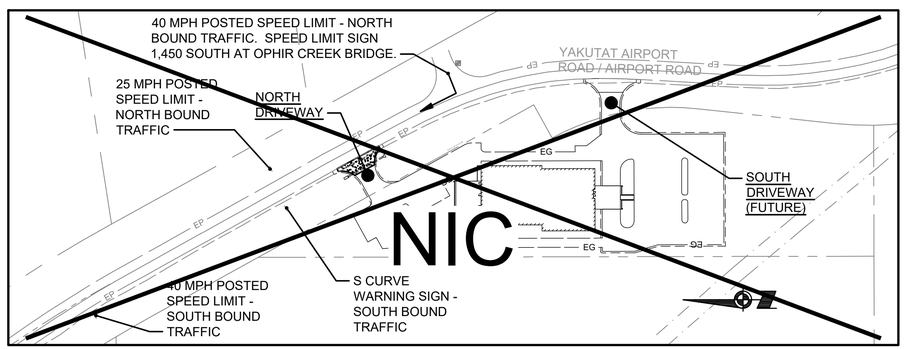

POSTED SPEED LIMIT MAP
SCALE: 1"=100' ON 22X34 PLOTTED SHEET

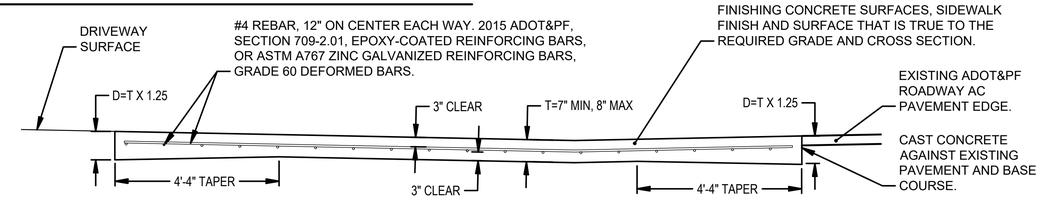

2 / SK2 CONCRETE PAVEMENT SECTION
SCALE: NTS

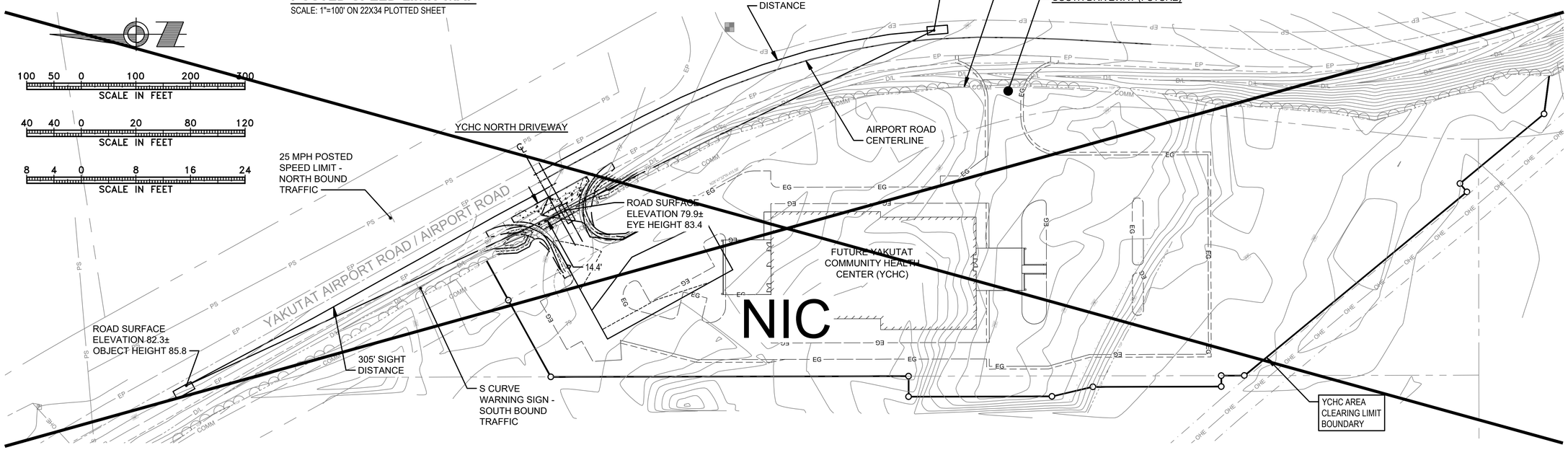

1 / SK2 YCHC NORTH DRIVEWAY LINE OF SIGHT (LOS) DIAGRAM - POSTED 40 MPH FOR BOTH NORTH AND SOUTH BOUND LANES
SCALE: 1"=40' ON 22X34 PLOTTED SHEET

ADOT&PF REVIEWED

Architects Alaska.
ARCHITECTS ALASKA
AK Corp. Authorization AECC561
900 W. 5th Avenue, Suite 403
Anchorage, Alaska 99501
907.272.3567
191 E. Swanson Avenue, Suite 203
Wasilla, Alaska 99654
907.373.7503
www.architectsalaska.com

PDC ENGINEERS
PLAN • DESIGN • CONSTRUCT
2700 Gambell St., Anchorage, AK 99503
907.743.3200 | AECC605

STATE OF ALASKA 49TH DAVID BRIAN AREHART CE 8799 REGISTERED PROFESSIONAL ENGINEER 5/12/19

YAKUTAT COMMUNITY HEALTH CENTER
YAKUTAT, ALASKA

Revisions		
No.	Description	Date

Drawn by DBA	Date AUGUST 2018
Checked HCB, DBA	Job No. 17046.01

Sheet Contents
LOS DIAGRAM AND DETAILS
NORTH DRIVEWAY PERMITTING
PERMIT NO. 28609

Category	Sheet No.
C	SK2

DRAWING FILE: p:\2017\17341\ps-oa_vdk_com_cntr\c\det permit-north entrance_2 of 4.dwg
PLOT DATE: 5/12/2019 4:35 PM

- Driveway vehicle
  - Proposed driveway FG ELV- 79.9 (+/-) + 3.5' = 83.4 ' object height

From Driveway where driver is placed at 0+00 looking Northwest = OK

Sight line appears to be ok as far as finished ground driveway and EG ground roadway is concerned.

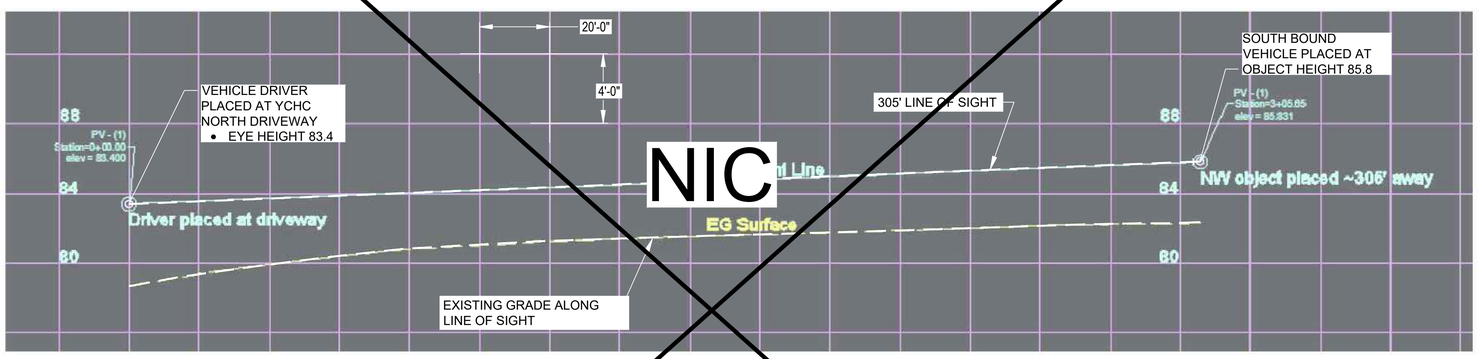

From Driveway where driver is placed at 0+00 looking Southeast= OK @ 305' SD sight line

Sight line appears to be ok as far as finished ground driveway and EG ground roadway is concerned.

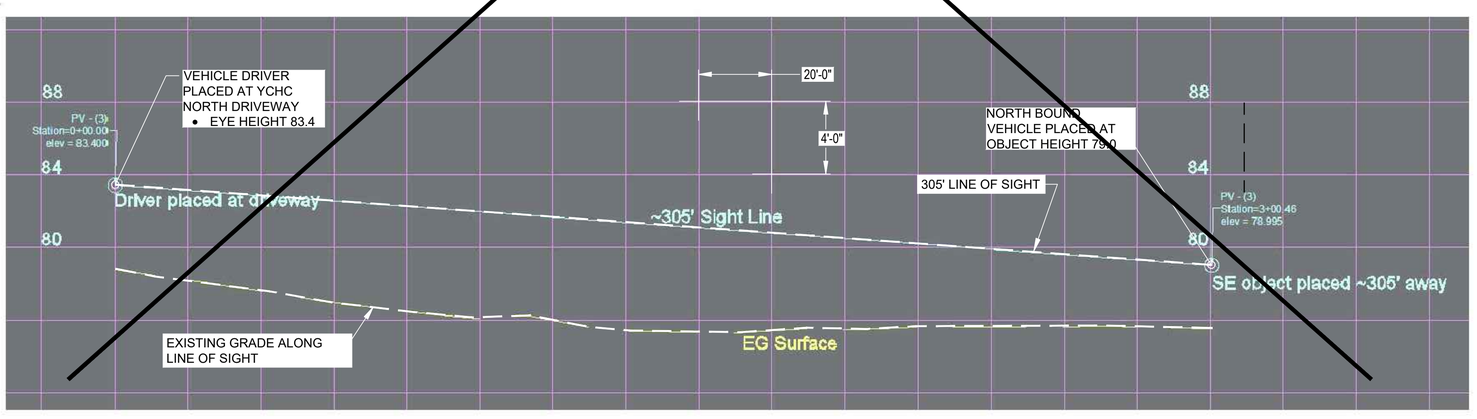

1 SK3 **YCHC NORTH DRIVEWAY VERTICAL LINE OF SIGHT (LOS) DIAGRAMS - POSTED 40 MPH FOR BOTH NORTH AND SOUTH BOUND LANES**
SCALE: NTS

30"X30", MUTCD R1-1 STOP SIGN, SHEET ALUMINUM WITH RETROREFLECTIVE SHEETING MEETING THE REQUIREMENTS OF 2015 ADOT&PF SPECIFICATION SECTION 730, SIGN MATERIALS.

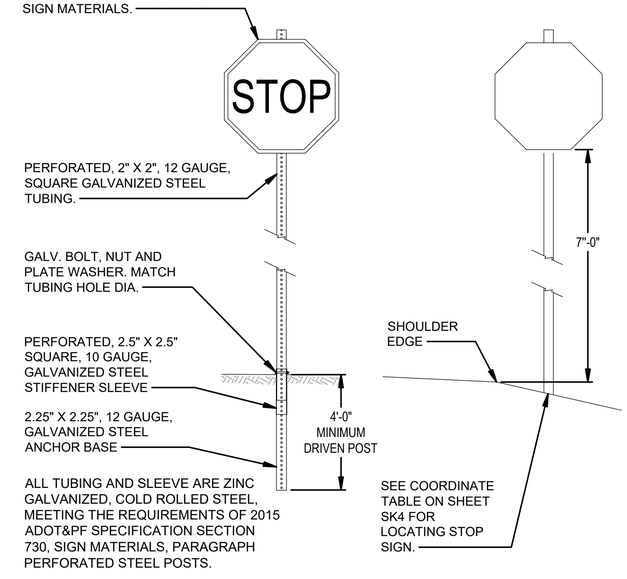

2 SK3 **NORTH DRIVEWAY STOP SIGN**
SCALE: NTS

ADOT&PF REVIEWED

Architects Alaska.
ARCHITECTS ALASKA
AK Corp. Authorization AECC561
900 W. 5th Avenue, Suite 403
Anchorage, Alaska 99501
907.272.3567
191 E. Swanson Avenue, Suite 203
Wasilla, Alaska 99654
907.373.7503
www.architectsalaska.com

PDC ENGINEERS
PLAN • DESIGN • CONSTRUCT
2700 Gambell St., Anchorage, AK 99503
907.743.3200 | AECC605

STATE OF ALASKA 49TH
DAVID BRIAN AREHART
CE 8799
5/12/19
REGISTERED PROFESSIONAL ENGINEER

YAKUTAT COMMUNITY HEALTH CENTER
YAKUTAT, ALASKA

Revisions		
No.	Description	Date

Drawn by DBA	Date AUGUST 2018
Checked HCB, DBA	Job No. 17046.01

Sheet Contents
VERTICAL LOS DIAGRAMS
NORTH DRIVEWAY PERMITTING
PERMIT NO. 28609

Category	Sheet No.
C	SK3

DRAWING FILE: p:\2017\17341\n-oo_ydk_com_cntr\c\dot permit-north entrance_3 of 4.dwg
PLOT DATE: 5/12/2019 4:35 PM

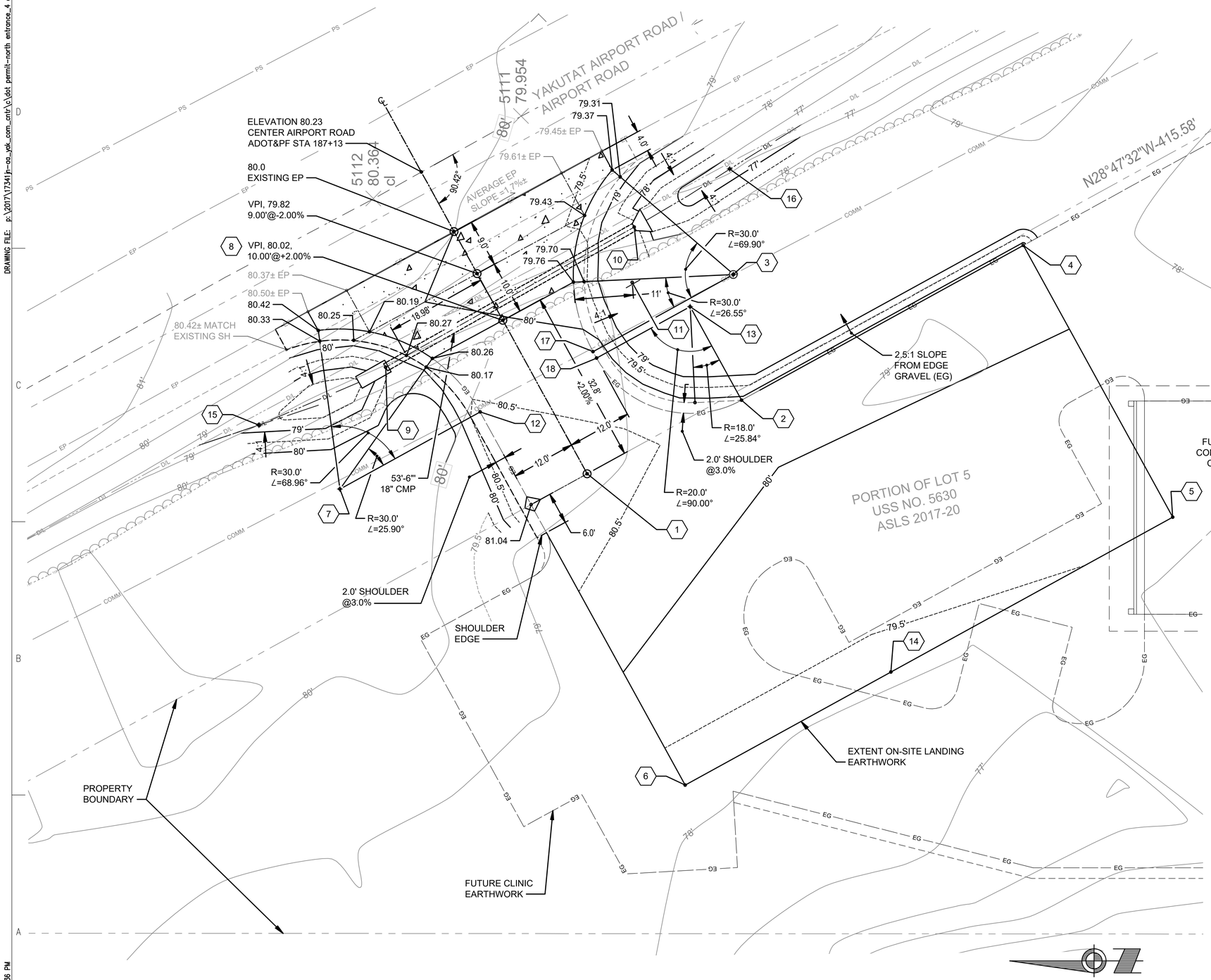

TABLE 1: NORTH DRIVEWAY POINTS				
POINT	ELEVATION	N	E	COMMENT
1	80.80	2 866 764.96	1 562 860.17	SURFACE
2	80.20	2 866 736.02	1 562 873.97	PC/EG
3	--	2 866 737.56	1 562 897.52	ORIGIN
4	80.20	2 866 683.20	1 562 903.00	EG
5	79.55	2 866 655.19	1 562 852.03	EG
6	79.27	2 866 746.57	1 562 801.81	EG
7	--	2 866 811.30	1 562 857.30	ORIGIN
8	80.02	2 866 782.20	1 562 891.55	VPI
9	77.68	2 866 802.74	1 562 880.14	CMP INV NORTH
10	76.98	2 866 756.14	1 562 906.42	CMP INV SOUTH
11	--	2 866 756.50	1 562 896.03	STOP SIGN, DTL 2, SHT SK3
12	80.56	2 866 785.02	1 562 871.76	EG, PC
13	--	2 866 745.66	1 562 891.49	ORIGIN
14	79.39	2 866 708.01	1 562 823.00	EG
15	78.56	2 866 826.51	1 562 869.29	DITCH
16	76.76	2 866 738.23	1 562 917.31	DITCH
17	80.10	2 866 763.85	1 562 883.07	EG, PC
18	80.13	2 866 763.18	1 562 881.86	EG, PT

1 / SK4 YCHC ADOT NORTH DRIVEWAY PERMIT - LAYOUT AND GRADING

SCALE: 1"= 10' ON 22X34 PLOTTED SHEET

10 5 0 10 20 30
SCALE IN FEET

ADOT&PF REVIEWED

Architects Alaska.
ARCHITECTS ALASKA
AK Corp. Authorization AECC561
900 W. 5th Avenue, Suite 403
Anchorage, Alaska 99501
907.272.3567
191 E. Swanson Avenue, Suite 203
Wasilla, Alaska 99654
907.373.7503
www.architectsalaska.com

PDC ENGINEERS
PLAN • DESIGN • CONSTRUCT
2700 Gambell St., Anchorage, AK 99503
907.743.3200 | AECC605

STATE OF ALASKA 49TH
DAVID BRIAN AREHART
CE 8799
5/12/18
REGISTERED PROFESSIONAL ENGINEER

YAKUTAT COMMUNITY HEALTH CENTER
YAKUTAT, ALASKA

Revisions		
No.	Description	Date

Drawn by	Date
DBA	AUGUST 2018
Checked	**Job No.**
HB, DBA	17046.01

Sheet Contents
LAYOUT AND GRADING
NORTH DRIVEWAY PERMITTING
PERMIT NO. 28609

Category	Sheet No.
C	SK4

DRAWING FILE: p:\2017\17341\n-ne_ydk_com_cntr\c\dot permit-north entrance_4 of 4.dwg
PLOT DATE: 5/12/2019 4:36 PM

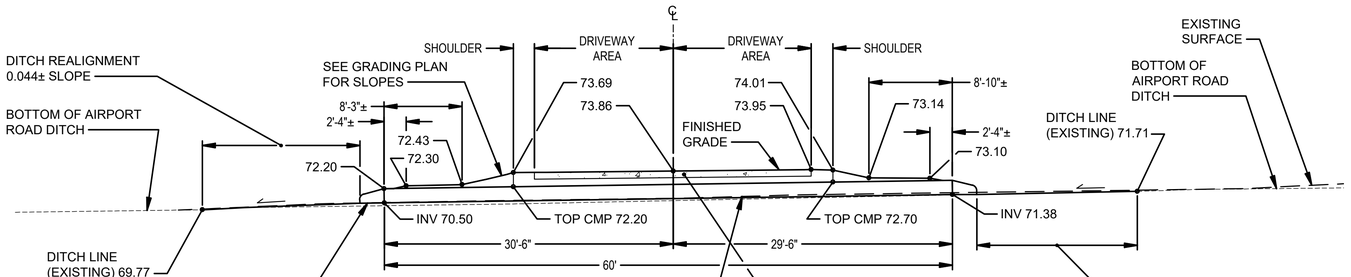

A SK5 **CMP PROFILE (LOOKING WEST)**
SCALE: 1"=8' PLOTTED ON 22X34 SHEET

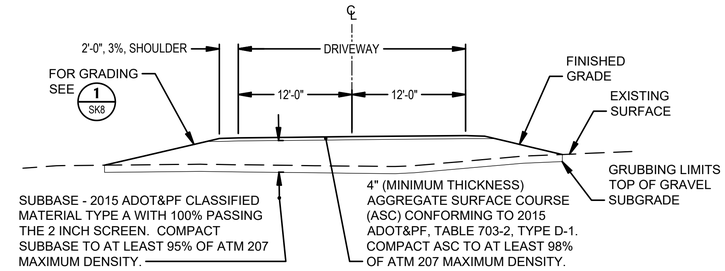

B SK5 **DRIVEWAY (LOOKING WEST)**
SCALE: 1"=8' PLOTTED ON 22X34 SHEET

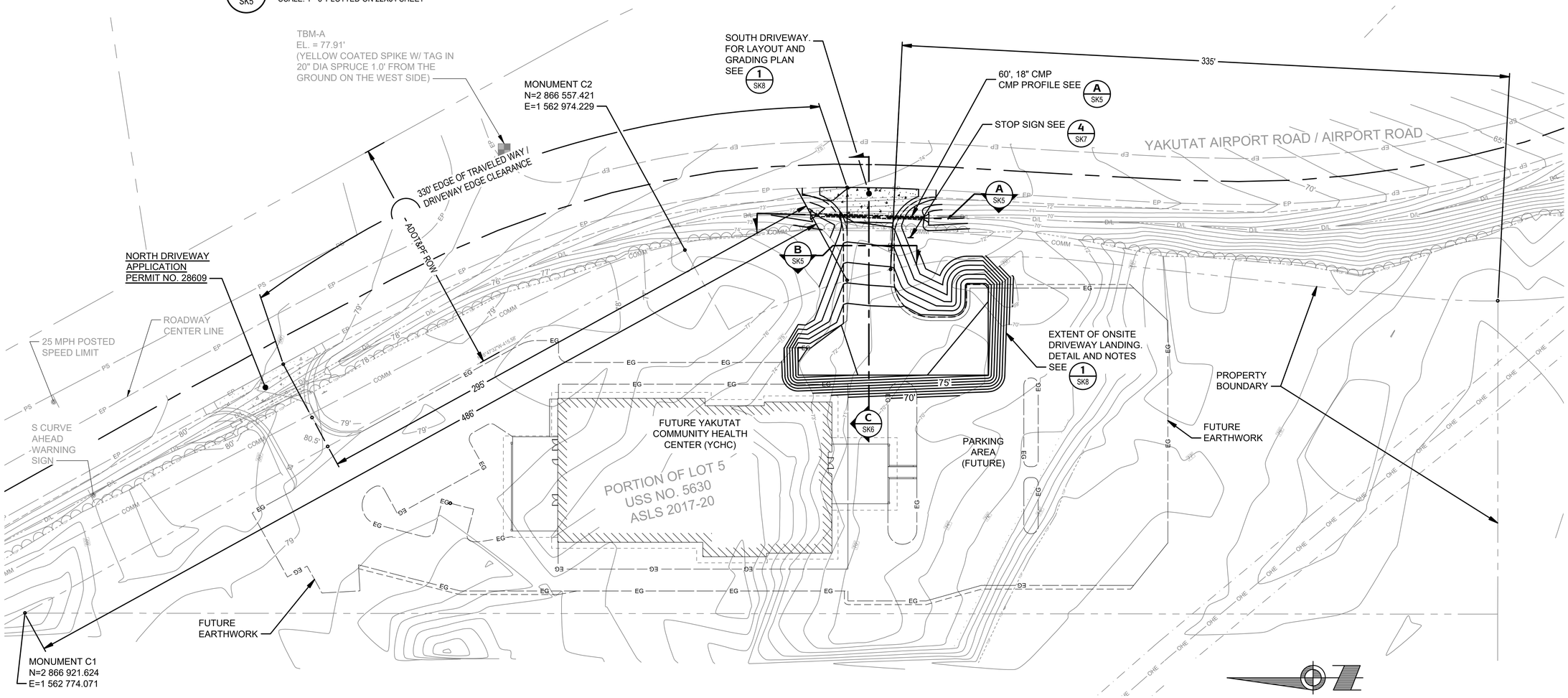

1 SK5 **YCHC SITE PLAN - ADOT SOUTH DRIVEWAY PERMIT**
SCALE: 1"= 30' ON 22X34 PLOTTED SHEET

30 15 0 30 60 90
SCALE IN FEET

8 4 0 8 16 24
SCALE IN FEET

ADOT&PF REVIEWED

Architects Alaska.
ARCHITECTS ALASKA
AK Corp. Authorization AECC561
900 W. 5th Avenue, Suite 403
Anchorage, Alaska 99501
907.272.3567
191 E. Swanson Avenue, Suite 203
Wasilla, Alaska 99654
907.373.7503
www.architectsalaska.com

PDC ENGINEERS
PLAN • DESIGN • CONSTRUCT
2700 Gambell St., Anchorage, AK 99503
907.743.3200 | AECC605

STATE OF ALASKA 49TH
DAVID BRIAN AREHART
CE 8799
1/3/19
REGISTERED PROFESSIONAL ENGINEER

YAKUTAT COMMUNITY HEALTH CENTER
YAKUTAT, ALASKA

Revisions		
No.	Description	Date

Drawn by DBA	Date JANUARY 2019
Checked KB, DBA	Job No. 17046.01

Sheet Contents
SITE PLAN AND SECTIONS
SOUTH DRIVEWAY PERMITTING
PERMIT NO. 28820

Category	Sheet No.
C	SK5

DRAWING FILE: p:\2017\17341\n-oa_vdk_com_ctr\c\dot permit-south entrance_1 of 4.dwg
PLOT DATE: 5/12/2019 4:38 PM

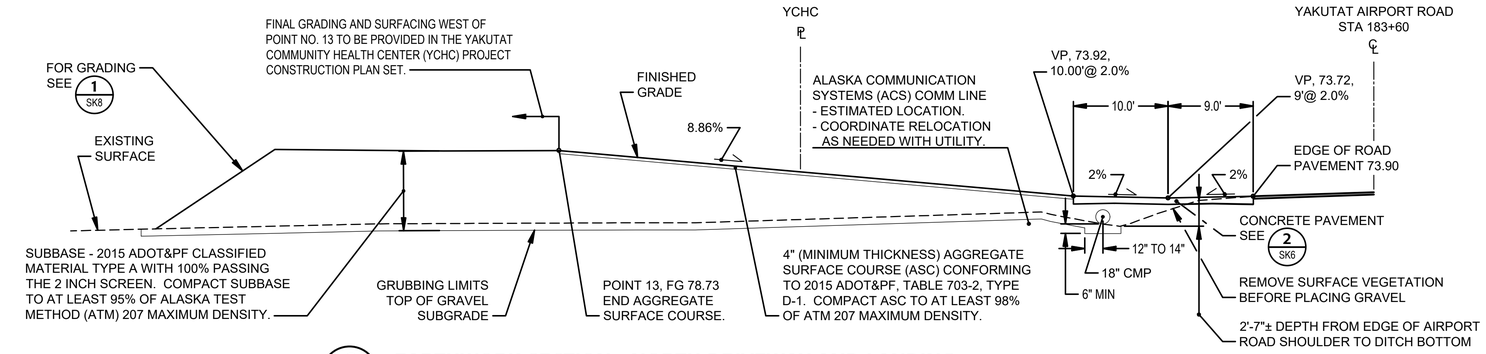

C / SK6 EARTHWORK SECTION - NORTH DRIVEWAY AND LANDING

SCALE: 1"=8' ON 22X34 PLOTTED SHEET

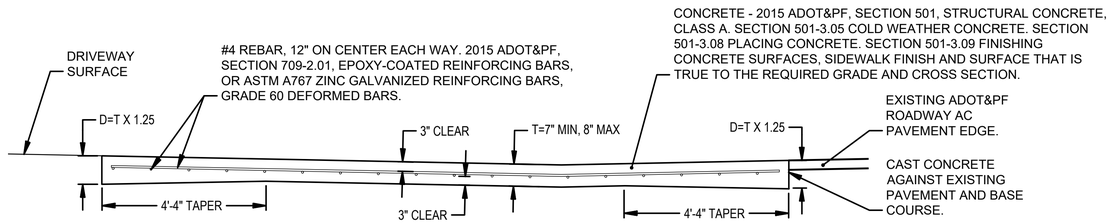

2 / SK6 CONCRETE PAVEMENT SECTION

SCALE: NTS

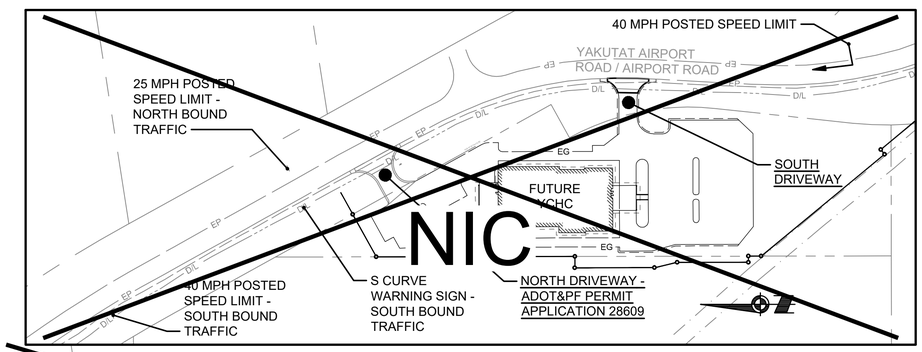

POSTED SPEED LIMIT MAP

SCALE: 1"=100' ON 22X34 PLOTTED SHEET

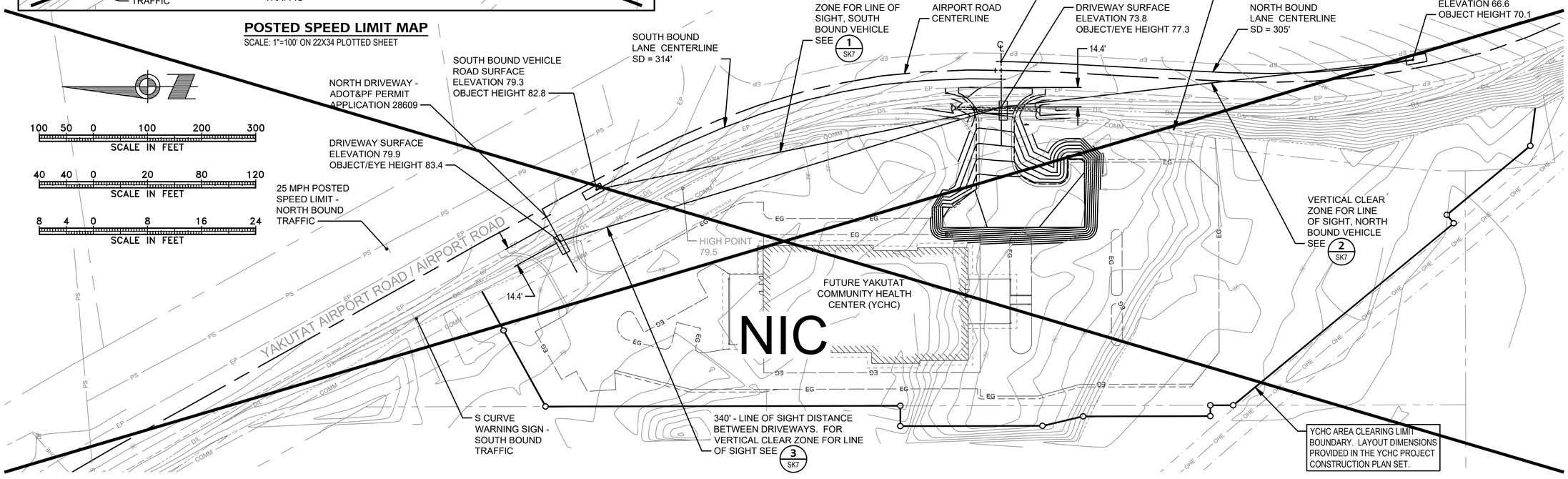

1 / SK6 YCHC SOUTH DRIVEWAY LINE OF SIGHT (LOS) DIAGRAM - POSTED 40 MPH FOR BOTH NORTH AND SOUTH BOUND LANES

SCALE: 1"=40' ON 22X34 PLOTTED SHEET

ADOT&PF REVIEWED

Architects Alaska.
ARCHITECTS ALASKA
AK Corp. Authorization AECC561
900 W. 5th Avenue, Suite 403
Anchorage, Alaska 99501
907.272.3567
191 E. Swanson Avenue, Suite 203
Wasilla, Alaska 99654
907.373.7503
www.architectsalaska.com

PDC ENGINEERS
PLAN • DESIGN • CONSTRUCT
2700 Gambell St., Anchorage, AK 99503
907.743.3200 | AECC605

STATE OF ALASKA 49TH
DAVID BRIAN AREHART
CE 8799
1/3/19
REGISTERED PROFESSIONAL ENGINEER

YAKUTAT COMMUNITY HEALTH CENTER
YAKUTAT, ALASKA

Revisions		
No.	Description	Date

Drawn by	Date
DBA	JANUARY 2019
Checked	**Job No.**
KB, DBA	17046.01

Sheet Contents
LOS DIAGRAM AND DETAILS
SOUTH DRIVEWAY PERMITTING
PERMIT NO. 28820

Category	Sheet No.
C	SK6

DRAWING FILE: p:\2017\17341pn-oa_yak_com_cnt\c\dot permit-south entrance_2 of 4.dwg
PLOT DATE: 5/12/2019 4:39 PM

DRAWING FILE: p:\2017\17341\pro_yak_com_cntr\c\dot permit-south entrance_3 of 4.dwg

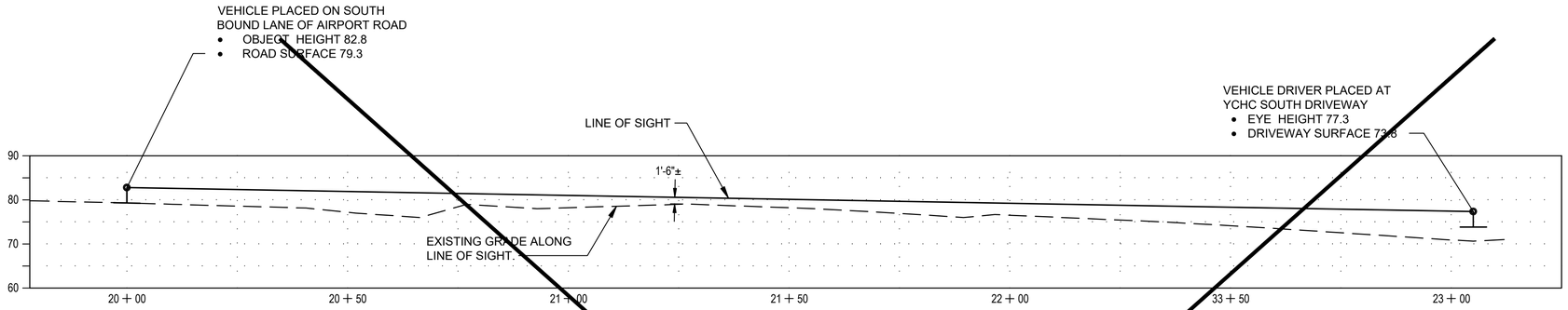

1 SK7 **YCHC SOUTH DRIVEWAY VERTICAL LINE OF SIGHT (LOS) DIAGRAM - SOUTH BOUND LANE, LANE POSTED AT 40 MPH**

SCALE: NTS

NIC

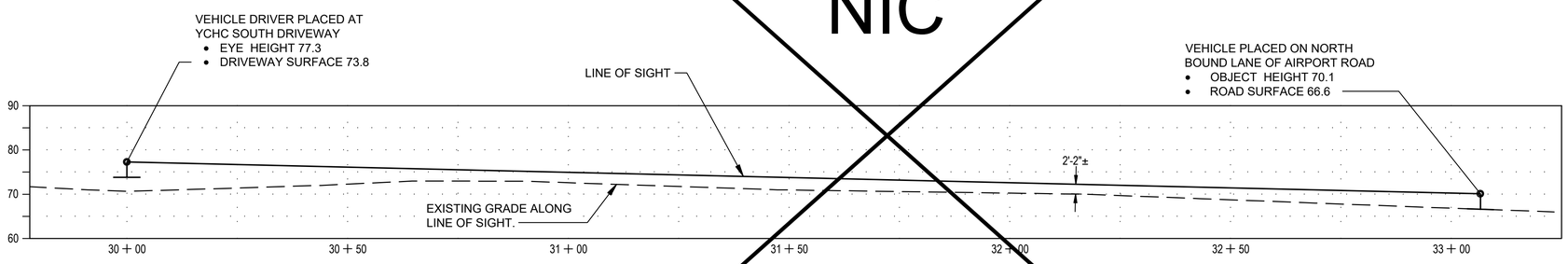

2 SK7 **YCHC SOUTH DRIVEWAY VERTICAL LINE OF SIGHT (LOS) DIAGRAM - NORTH BOUND LANE, LANE POSTED AT 40 MPH**

SCALE: NTS

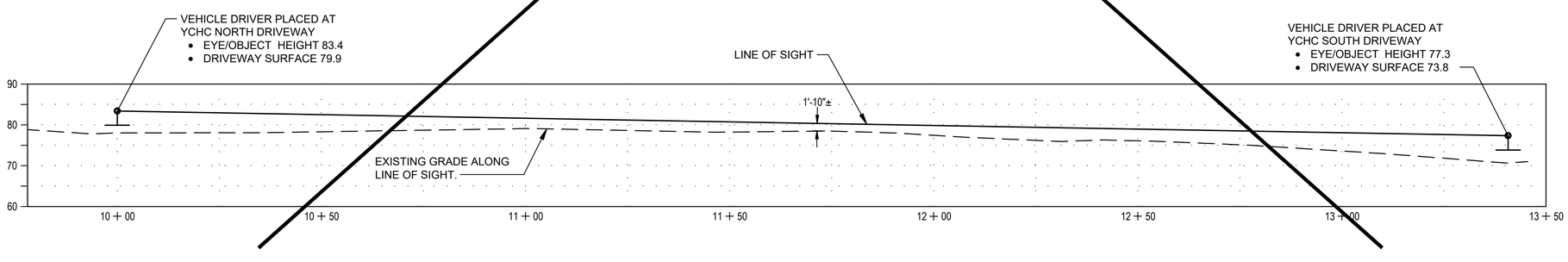

3 SK7 **YCHC DRIVEWAYS - VERTICAL LINE OF SIGHT (LOS) DIAGRAM BETWEEN NORTH AND SOUTH DRIVEWAYS**

SCALE: NTS

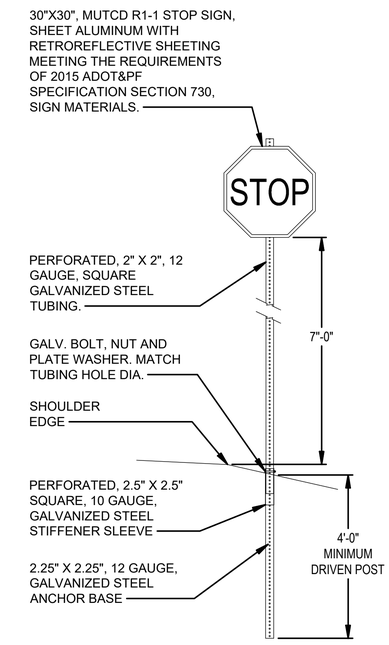

ALL TUBING AND SLEEVE ARE ZINC GALVANIZED, COLD ROLLED STEEL, MEETING THE REQUIREMENTS OF 2015 ADOT&PF SPECIFICATION SECTION 730, SIGN MATERIALS, PARAGRAPH PERFORATED STEEL POSTS.

4 SK7 **SOUTH DRIVEWAY STOP SIGN**

SCALE: NTS

ADOT&PF REVIEWED

Architects Alaska.
ARCHITECTS ALASKA
AK Corp. Authorization AECC561
900 W. 5th Avenue, Suite 403
Anchorage, Alaska 99501
907.272.3567
191 E. Swanson Avenue, Suite 203
Wasilla, Alaska 99654
907.373.7503
www.architectsalaska.com

PDC ENGINEERS
PLAN • DESIGN • CONSTRUCT
2700 Gambell St., Anchorage, AK 99503
907.743.3200 | AECC605

STATE OF ALASKA 49TH
DAVID BRIAN AREHART
CE 8799
1/3/19
REGISTERED PROFESSIONAL ENGINEER

YAKUTAT COMMUNITY HEALTH CENTER
YAKUTAT, ALASKA

Revisions		
No.	Description	Date

Drawn by DBA	Date JANUARY 2019
Checked KB, DBA	Job No. 17046.01

Sheet Contents
VERTICAL LOS DIAGRAMS
SOUTH DRIVEWAY PERMITTING
PERMIT NO. 28820

Category	Sheet No.
C	SK7

PLOT DATE: 5/12/2019 4:40 PM

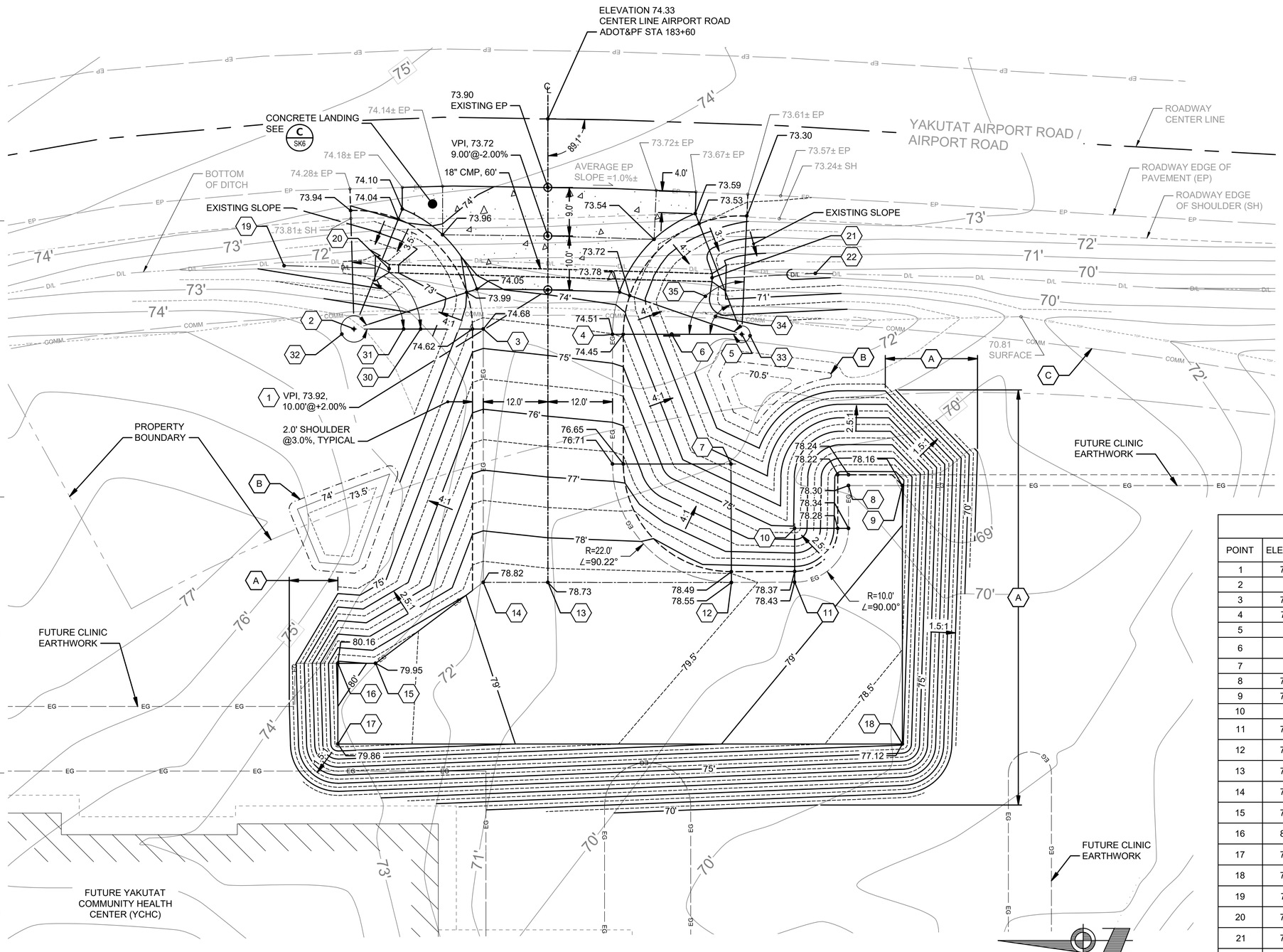

1 SK8 **YCHC ADOT SOUTH DRIVEWAY PERMIT - LAYOUT AND GRADING**

SCALE: 1"= 10' ON 22X34 PLOTTED SHEET

10 5 0 10 20 30
SCALE IN FEET

SHEET NOTES

A. EXTENT OF ONSITE DRIVEWAY LANDING EARTHWORK. CONTINUATION OF EARTHWORK AND FINAL GRADING TO BE PROVIDED IN THE YAKUTAT COMMUNITY HEALTH CENTER (YCHC) PROJECT CONSTRUCTION PLAN SET.

B. FUTURE STORM WATER RETENTION BASIN TO BE PROVIDED IN THE YAKUTAT COMMUNITY HEALTH CENTER (YCHC) PROJECT CONSTRUCTION PLAN SET.

C. ESTIMATED LOCATION OF ALASKA COMMUNICATION SYSTEMS (ACS) COMM LINE. COORDINATE RELOCATION AS NEEDED WITH UTILITY.

TABLE 1: CURVE DATA

LOCATION	ANGLE	RADIUS
30	91.65°	22.0 FT
31	68.06°	24.0 FT
32	18.00°	24.0 FT
33	19.05°	24.0 FT
34	68.94°	24.0 FT
35	92.50°	22.0 FT

TABLE 2: SOUTH DRIVEWAY POINTS

POINT	ELEVATION	N	E	COMMENT
1	73.92	2 866 455.99	1 562 989.61	VPI
2	--	2 866 491.99	1 562 982.35	ORIGIN
3	74.68	2 866 467.99	1 562 982.35	PC
4	74.51	2 866 443.99	1 562 981.36	PC
5	--	2 866 419.99	1 562 981.36	ORIGIN
6	--	2 866 432.99	1 562 981.36	STOP SIGN, DTL 2, SHT SK3
7	--	2 866 421.99	1 562 957.29	ORIGIN
8	79.30	2 866 400.16	1 562 953.29	EG, CORNER
9	78.16	2 866 390.16	1 562 953.29	EG, CORNER
10	--	2 866 410.16	1 562 945.33	ORIGIN
11	78.43	2 866 410.16	1 562 935.33	PC
12	78.55	2 866 421.91	1 562 935.29	PC, FINAL GRADE
13	78.73	2 866 455.99	1 562 935.30	FINAL GRADE
14	78.82	2 866 467.99	1 562 935.30	EG, CORNER, FINAL GRADE
15	79.95	2 866 487.99	1 562 920.29	EG, CORNER
16	80.16	2 866 494.99	1 562 920.29	EG, CORNER
17	79.86	2 866 494.99	1 562 905.29	CORNER, TOP SLOPE
18	77.12	2 866 390.16	1 562 905.29	CORNER, TOP SLOPE
19	71.71	2 866 504.98	1 562 994.09	BTM DITCH
20	71.38	2 866 485.48	1 562 993.54	CMP INV
21	70.50	2 866 425.51	1 562 991.87	CMP INV
22	69.77	2 866 406.32	1 562 992.67	BTM DITCH

ADOT&PF REVIEWED

Architects Alaska.
ARCHITECTS ALASKA
AK Corp. Authorization AECC561
900 W. 5th Avenue, Suite 403
Anchorage, Alaska 99501
907.272.3567
191 E. Swanson Avenue, Suite 203
Wasilla, Alaska 99654
907.373.7503
www.architectsalaska.com

PDC ENGINEERS
PLAN • DESIGN • CONSTRUCT
2700 Gambell St., Anchorage, AK 99503
907.743.3200 | AECC605

STATE OF ALASKA 49TH
DAVID BRIAN AREHART
CE 8799
1/3/19
REGISTERED PROFESSIONAL ENGINEER

YAKUTAT COMMUNITY HEALTH CENTER
YAKUTAT, ALASKA

Revisions

No.	Description	Date

Drawn by DBA	Date JANUARY 2019
Checked KB, DBA	Job No. 17046.01

Sheet Contents
LAYOUT AND GRADING
SOUTH DRIVEWAY PERMITTING
PERMIT NO. 28820

Category	Sheet No.
C	SK8

DRAWING FILE: p:\2017\17341 pw-ua_yak_com_ctr\c\dot permit-south entrance_4 of 4.dwg
PLOT DATE: 5/12/2019 4:41 PM